VOLUME 13 PUBLISHED MARCH, 1982

SECRET CB®

NEW!

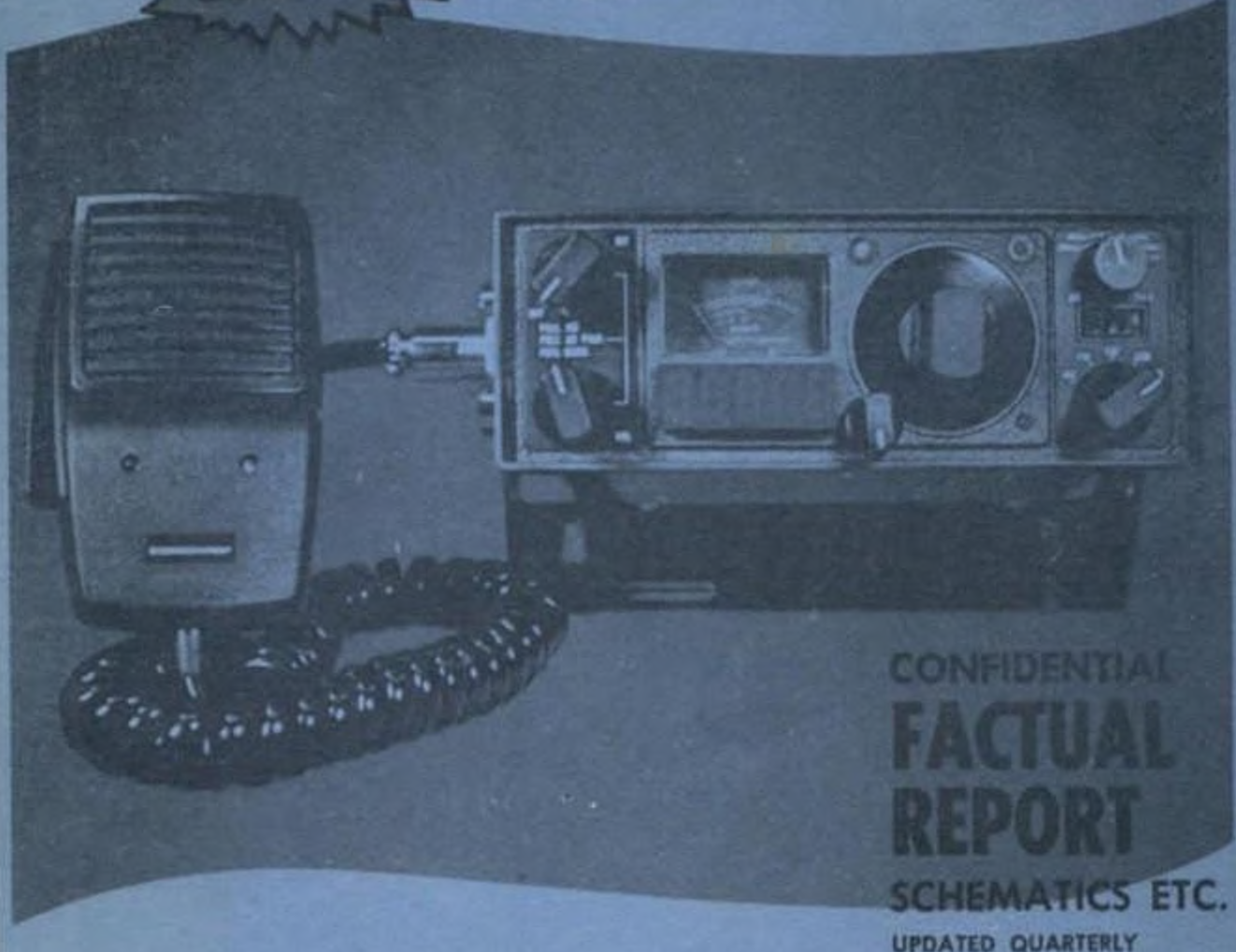

CONFIDENTIAL
FACTUAL REPORT
SCHEMATICS ETC.
UPDATED QUARTERLY

BY VIC RICHTER

PRICE $19.95

IMPORTANT: READ THIS FIRST

The information in this book is not to be used to exceed F.C.C. specifications, in any case, as applied to power, modulation, frequency spectrum, etc. It is illegal to do this to any CLASS D RADIO.

This book is a factual report of gathered information, and as such is intended for use on radios for EXPORT ONLY.

If you are not familiar with electronics, it is better to check for advice with your local electronics or CB center, as to restrictions, etc., concerning your radio.

More information, on other units will be forthcoming in future issues, to be published on a quarterly basis.

This book will not be found at a book store, but can be obtained through your local CB Dealer or Distributor, or by completing the order form in this book.

Secret CB
Volume Thirteen
Published March 1982

©Copyright 1982, Dane D. Selman
All rights reserved. No part of this book shall be reproduced, stored in a retrieval system, or transmitted by any means, electronic, mechanical, photocopying, recording, or otherwise, without written permission from the publisher. No patent liability is assumed with respect to the use of the information contained herein. While every precaution has been taken in the preparation of this book, the publisher assumes no reponsibility for errors or omissions. Neither is any liability assumed for damages resulting from the use of the information contained herein.

PRINTED IN THE UNITED STATES OF AMERCIA

New issues quarterly

Address any and all inquiries to:

Selman Enterprises, Inc.
P. O. Box 8189
Corpus Christi, Texas 78412

(512) 992-1303

ACKNOWLEDGEMENTS

SECRET CB WISHES TO GRATEFULLY ACKNOWLEDGE THE FOLLOWING PEOPLE FOR THEIR HELP AND CONTRIBUTIONS TOWARD GETTING VOLUME 13 IN PRINT. THEIR ENCOURAGEMENT AND CONTRIBUTION OF MATERIAL HAS BEEN INVALUABLE.

E. R. GENDREAU
LESTER R. JERNIGAN
BOB LEVERICH
DAVID LITTERER
D. W. POWERS
MIKE STEPHENS
JAMES VAUGHAN
C. R. WAGGONER
BILL WENTZ

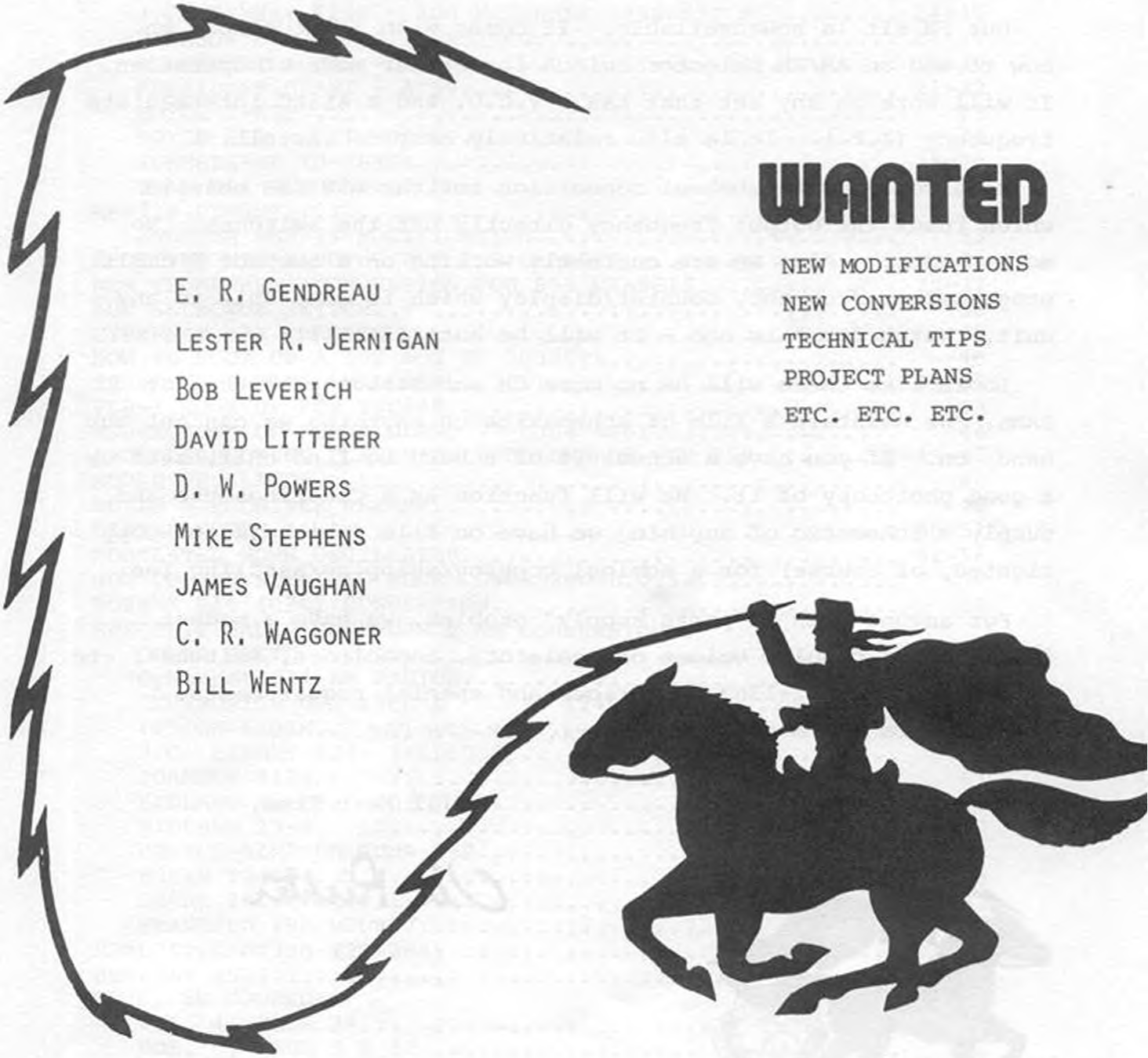

VIC says "THANKS" and a free book to the above people

INTRODUCTION

Here we are at our "LUCKY 13" edition and this time we are featuring a new import, the SOMMERKAMP TS-788DX. See the feature story for full details. I'm sure you will be impressed.

Our FM Kit is now available. It comes with instructions on how to add an AM/FM selector switch for either mode of operation. It will work on any set that has a V.C.O. and a 455KC intermediate frequency (I.F.). It is also relatively easy to install.

We have a new thumbwheel conversion for the 858 SSB chassis which reads the output frequency directly off the switches. No more charts. Also we are currently working on a compact 6 digit programmable frequency counter/display which is adaptable to any unit. Watch for this one - it will be hot!!!!!!!!!!!

Looks like there will be no more CB schematics published by SAMS. We maintain a file of schematics on anything we can get our hands on. If you have a schematic of a hard to find unit, send us a good photocopy of it. We will function as a Clearinghouse and supply a schematic of anything we have on file (which is not copy righted, of course) for a nominal copying/shipping/handling fee.

For anyone with a "parts supply" problem, we have a modest inventory of popular values of resistors, capacitors, switches, etc. Call us at 512-992-1303 for prices and special requirements. Phone orders are accepted Mon.-Fri. 9AM-6PM CST.

Till Next Time,

Vic Richter

TABLE OF CONTENTS

PAGE #

ACKNOWLEDGEMENTS..... 1
INTRODUCTION..... 2
TABLE OF CONTENTS..... 3
INTRODUCING THE SOMMERKAMP TS-788DX..... 4-9
CONVERSIONS:
CENTURIAN 40D SSB MODULATION INCREASE..... 10
FANON FANFARE 350F - 858 CHIP..... 11-12
J.C. PENNEY 981-6247 CLARIFIER..... 13
J.C. PENNEY 6248 - ADD VARIABLE TRANSMIT F_o..... 14-15
PANASONIC RJ-3700 - SM5104G..... 16-17
PRESIDENT ADAMS - 858..... 18-20
PRESIDENT GRANT - 8719..... 21-22
ROYCE 1-632..... 23
ROYCE 642 - CCI 3001..... 24
SOMMERKAMP TS-788DX..... 25-30
TRAM D64 - NDC40013 PLL..... 31
MB8719 PINOUT..... 32
ANOTHER MB8719 MODIFICATION..... 33
RECEIVER WIDEBANDING FOR 858 CHASSIS..... 34
NEW THUMBWHEEL CONVERSION FOR 858 CHASSIS..... 35-37
AGC SELECTOR SWITCH..... 38
CYBERNET 02A CHASSIS 39
HOW TO HOOK UP A 10T POT TO 2000GTL..... 40
2824C OPERATION ANALYSIS..... 41-43
VSB-1 HOOK UP FOR TRC448..... 43
VSB-1 HOOK UP FOR MIDLAND 77-0004 4001..... 44
TROUBLESHOOTING CLARIFIER PROBLEMS ON THE 858..... 45-47
SUPER REGULATOR..... 48
BUILD A RECEIVER PREAMP..... 49
LINEAR NOTES..... 50-51
MODULATED GUNN OSCILLATOR..... 52-56
HOW TO ADD SLIDE TO YOUR COBRA 29GTL..... 57
BOWMAN 910 (02A) CONVERSION..... 58
SPECIFIC RADIO TUNE-UPS & AM CONVERSIONS:
COBRA 29LTD..... 59
Cybernet 02A AM RADIOS..... 59
GEMTRONICS GTX 5000 & ROBYN T240D..... 60
ITT CB-4000M..... 61
J.C. PENNEY 6246 (PLL6055)..... 61
JOHNSON 4125/4174..... 61
MIDLAND 13-882C (02A)..... 62
MIDLAND 13-867..... 62
PEARCE-SIMPSON PUMA 23B..... 62
ROBYN T240D..... 63
SHARK 23..... 63
STANDARD 29A uPD857..... 63
REALISTIC DX300 (20-204)..... 64
BEARCAT 250..... 65
OOPS, WE GOOFED:
VOL. 4, PAGE 39..... 66
VOL. 6, PAGE 3 & 12..... 66
VOL. 7, PAGE 54..... 66
VOL. 10, PAGE 25 & 48..... 66-67
VOL. 11, PAGE 4, 6, 10, 41, & 75..... 67
INDEX VOLUMES 1 THRU 12..... 68-80
SECRET CB ORDER FORM..... 80

SOMMERKAMP

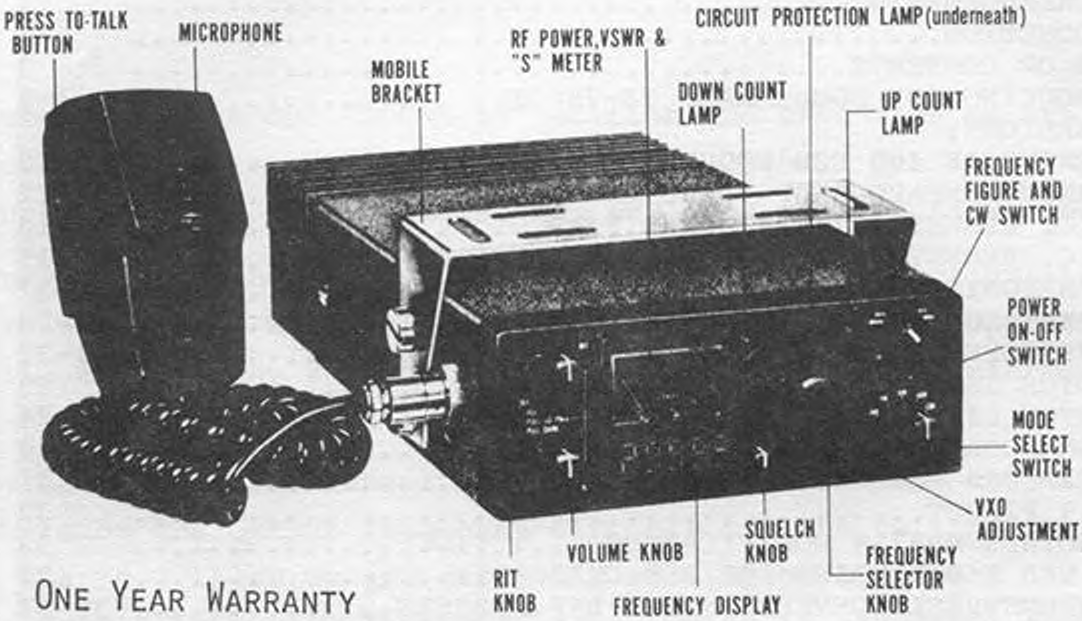

ONE YEAR WARRANTY

NEW!

SOMMERKAMP

MODEL: TS-788DX

10 METER

GENERAL:

1.	Semiconductors	: 31 IC's, 41 Transistors, 2 FET's & 119 Diodes.
2.	Frequency Range	: 28.000—29.999MHz
3.	Modes of Operation	: AM, FM, LSB, USB & CW
4.	Speaker	: Dynamic type, 8 ohm.
5.	Microphone	: Ceramic type
6.	Power Supply	: 11V—16V DC, negative ground.
7.	Antenna Impedance	: 50 ohm.
8.	Size	: 61×156×290mm

RECEIVER:

1.	Receiver System	: Single Conversion PLL Superheterodyne.
2.	Sensitivity at S/N 10dB	: AM ·····0.75μV
		: FM ·····0.75μV
		: SSB·····0.25μV
3.	Selectivity	: AM ·····6KHz at Bandwidth – 6dB.
		: FM ·····6KHz 60dB down at 8 KHz
		: SSB·····2.4KHz at Bandwidth – 6dB
4.	AGC Figure of Range	: 80dB. 60dB down at 4.8KHz
5.	Squelch Range	: 1μV—100μV.
6.	Audio Output Power	: 2.5 Watts
7.	Spurious Response	: – 60dB.
8.	I.F.	: 10.7MHz.

FM TRANSMITTER:

1.	RF Output Power (max)	: 50 Watts
2.	Deviation	: ±1.5KHz.
3.	Harmonic Suppression	: More than 60dB.

AM TRANSMITTER:

1.	RF Output Power	: 25 watts carrier
2.	Modulation Capability	: More than 80%
3.	Harmonic Suppression	: More than 50dB.

SSB TRANSMITTER:

1.	RF Output Power (max)	: 50 Watts PEP
2.	Carrier Suppression	: More than 50dB.
3.	Unwanted Sideband Suppression	: More than 60dB.
4.	Harmonic Suppression	: More than 60dB.

INTRODUCING THE

SOMMERKAMP 10 METER TS-788DX

The SOMMERKAMP TS-788DX transceiver has been designed for continuous heavy duty mobile and base station application on AM, FM, LSB, USB and CW. The best feature of this unit is the continuous coverage of the entire 28.000 - 29.999 MHz. band. This is accomplished by using the frequency selector knob in conjunction with the frequency figure switch. You can select 100KC, 10KC, 1KC or 100Hz. steps. The 5 digit frequency counter displays the results.

Another special feature is the remote control microphone. Up and Down pushbutton switches on the top of the mike select the frequency and scanner functions. On the side are two pots, one is for the Volume and the other is the Clarifier. The PTT button is on the opposite side. On the rear of the mike is a recessed slide switch which selects internal or Mic Speaker. The mike plug is an 8 pin locking-ring type. This transceiver is designed to operate on 13.8 VDC and draws 8.5-10 amps. Use a regulated heavy duty power supply for base station operation.

The receiver section will receive AM/A3, FM/F3, SSB/A3J and CW/A1 signals in the 28.000 to 29.999 MHz band. The unique combination of low noise FET's, ceramic and crystal filters, efficient noise limiter (ANL) and a HI-FI quality audio amplifier results in exceptional reception quality. The latest advances in solid state technology have been incorporated into this unit resulting in superb sensitivity and unwanted signal

rejection and noise suppression available previously only in space and military communications equipment. The power supply of the receiver RF, IF and Oscillator section is stabilized by an extreme sharp cut-off Zener diode to obtain the high sensitivity and unwanted signal rejection. The efficient series gate noise limiter, which virtually cuts off the audio output during ignition noise pulses, is defeatable to make even the weakest signal audible which otherwise would be cut off by the threshold level of the ANL switching diode. The high squelch sensitivity is achieved by using a separate squelch detector and switching circuit with a carefully balanced hysteresis. The audio amplifier is of transformerless design and will drive any load between 8 ohms and indefinite, such as, internal speaker or external speaker/ microphone or headset combinations. An automatic tuning circuit automatically tunes to the best reception on the entire band.

The transmitter section is designed for continuous heavy transmission on either AM/A3, FM/F3, SSB/A3J and CW/A1 signal in the 28.000 - 29.999 MHz. band. The transmitter consists of a Phased-Locked Loop circuit and one crystal controlled oscillator. The output is synthesized in a balanced mixer followed by a double tuned filter, class AB1 buffers, auto-tune circuit and power output stage, coupled by series and pi-matching filters to the antenna jack. Output power can be varied. If both Volume and RIT knobs are pulled out, you will be pushing about 10W PEP. Any other combination of these two knobs will give full output

power of about 50W PEP. A VSWR protection circuit disables the transmitter so it cannot be damaged by bad antennas, shorted coax, etc. A lamp behind the Frequency Selector Knob alerts you when this situation arises. It is reset by momentarily switching the transceiver off.

The Modulator consists of an input audio filter, pre-amplifier, ALC amplifier, and audio buffer followed by a balanced modulator for AM/SSB, or directly to the VCO for FM. The input circuit has been designed for a 500 ohm dynamic microphone, a 1000 ohm ceramic microphone or a 32 ohm speaker/microphone combination with a 100 ohm resistor in series.

On all new models the SQUELCH Control pulls out to perform another function. This gives a 100KC offset for repeater use, a very nice function.

A matching 10 amp continuous/15 amp surge power supply with a built-in base speaker is now available. It is 5" high and has a black face with matching blue side panels. Pushbutton terminals are provided for quick power hookup. A separate cable with a miniature plug on the end plugs into the transciever SP jack for base speaker operation. This mades a really sharp base station set up.

The manual accompanying the unit is also of high quality including schematics, parts layout, wiring layout, voltage charts, parts list, etc..

BLOCK DIAGRAM

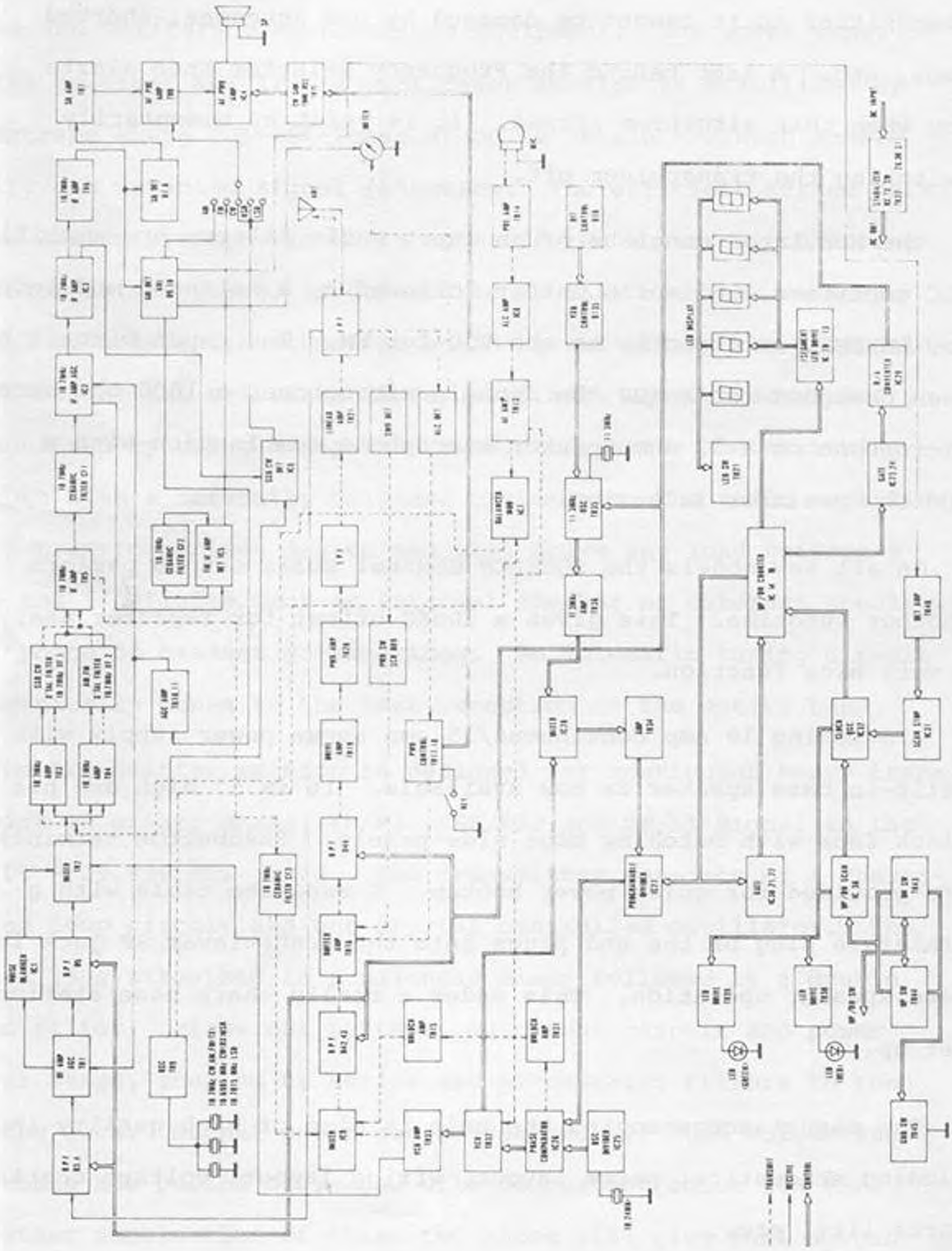

The "guts" of the unit is built on two pc boards sandwich together with the component sides up on top and bottom. The high power RF linear is attached to the rear of the unit in its own shielded compartment box with a generous amount of finned anodized aluminum heatsink. It uses an MRF454 to generate the high power output. A 2SC1306 transistor is used as the driver and a 2SC2098 is used as the power amp to drive the MRF454 Linear amp.

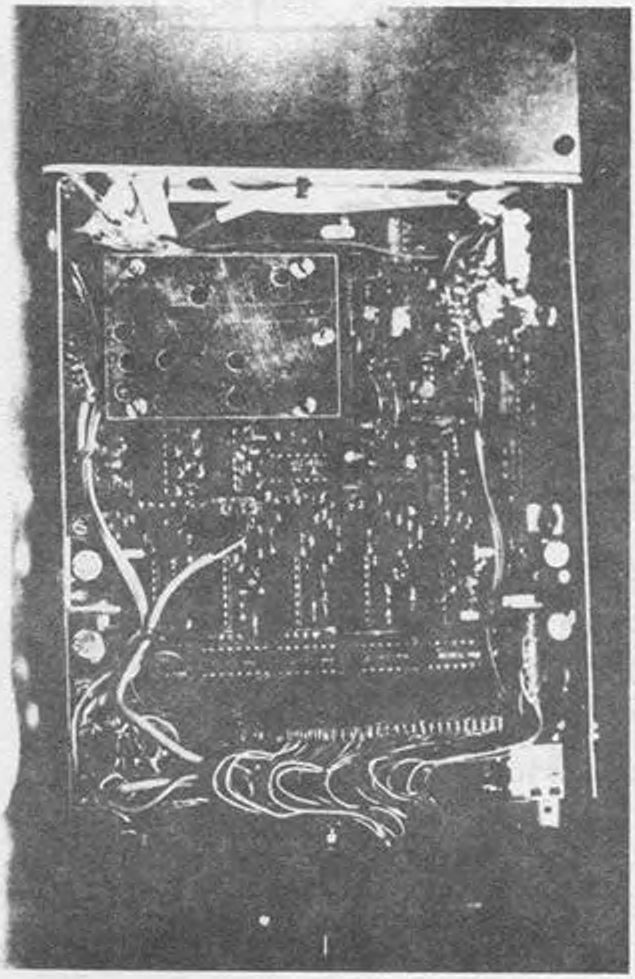

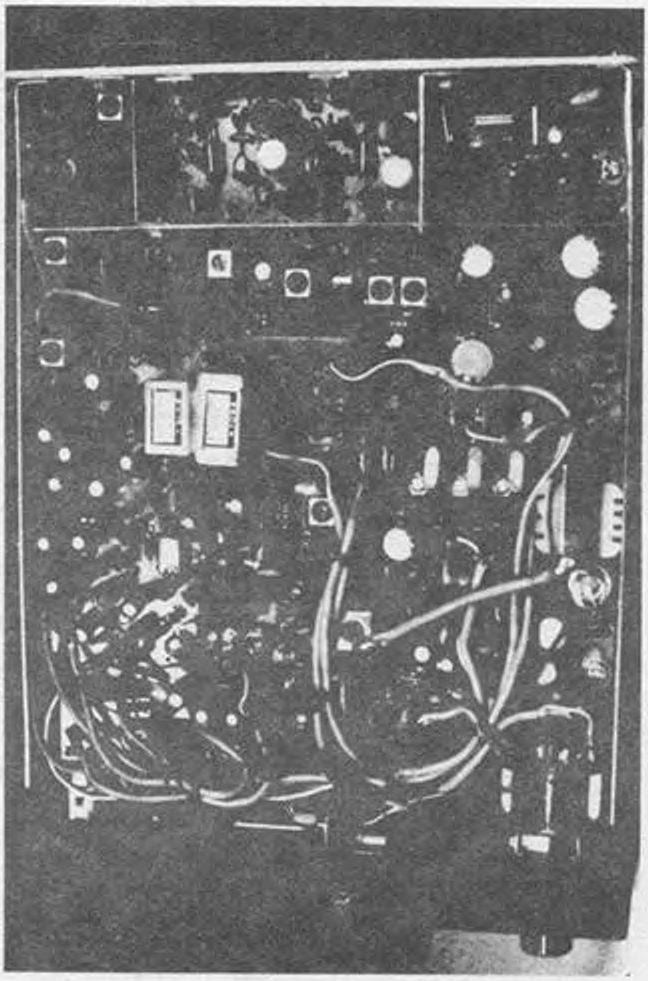

THIS UNIT IS EASY TO OPERATE AND A JOY TO USE. ORDER YOURS TODAY FROM SELMAN ENTERPRISES, INC. OR YOUR FAVORITE SECRET CB DEALER OR DISTRIBUTOR.

CENTURIAN 40D SSB
MODULATION INCREASE

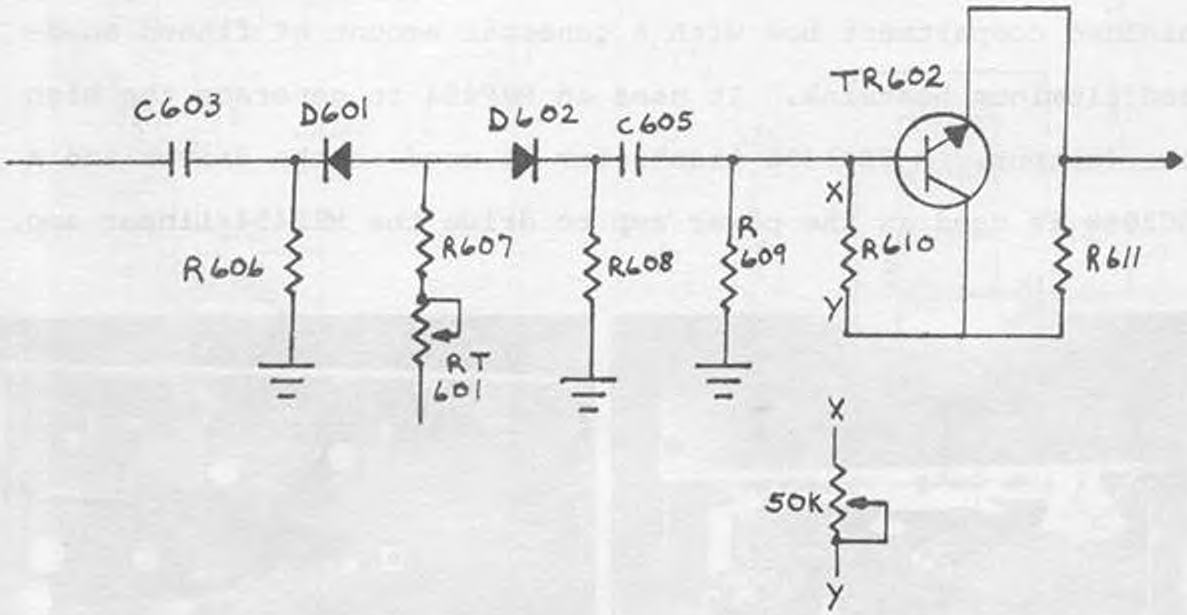

1. Remove R606 (10K).
2. Remove R607 (100K).
3. Remove RT601 (100K Trimmer).
4. Remove R608 (10K).
5. Remove D601 and install a solid wire jumper in its place.
6. Remove D602 and install a solid wire jumper in its place.
7. Remove R610 and install a 50K Trimmer Resistor in its place. Adjust for 3VDC on base of TR602.

   NOTE: R610 was 56K. with pot adjusted, R=16K.

FANON FANFARE 350F 858 CHIP

SLIDER:

1. Clip D24.
2. Lift end of R61 opposite R60.
3. Solder a wire onto the lifted end of R61.
4. Solder the other end to cathode of D32 zener.
   This supplies 9 volts to the clarifier.
5. Remove D26 zener and discard.
6. Replace D26 above with an 8.2V zener.
7. Locate Orange wire on clarifier.
8. Cut Orange wire loose from pc board and ground it.
9. Remove R28 (4.7K) and replace with a 1K.

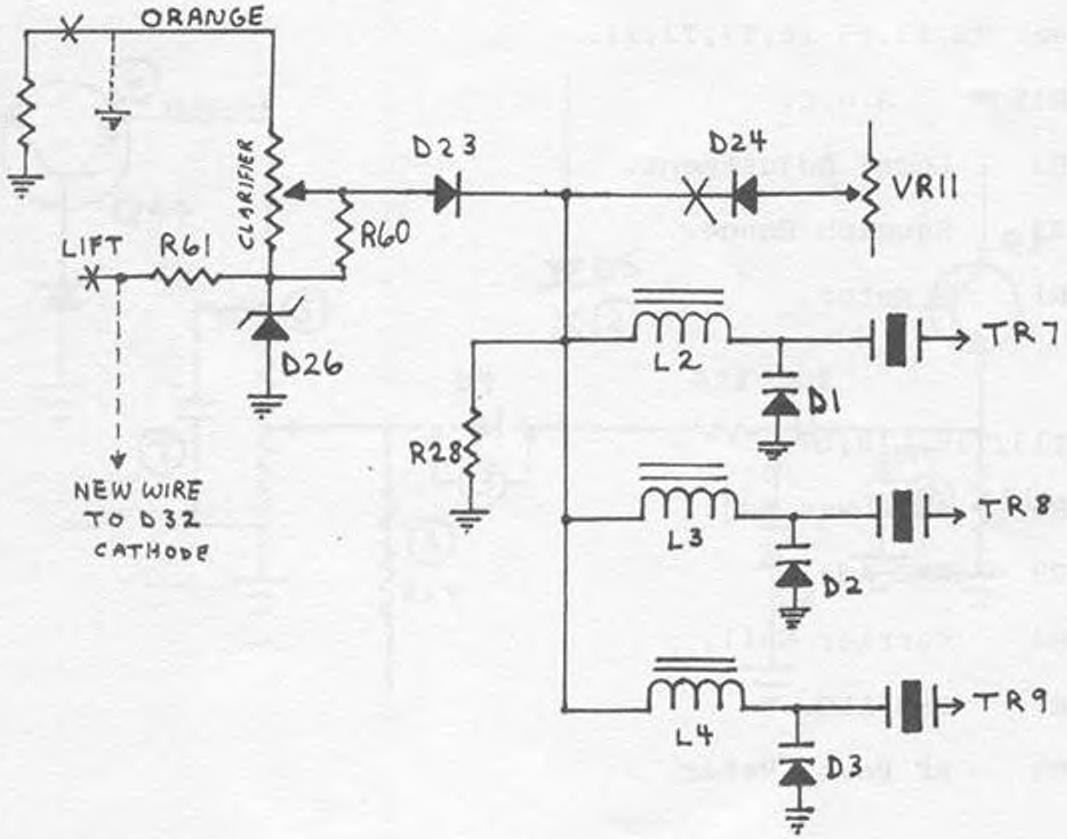

FANON FANFARE 350F 858 CHIP cont'd.:

WIDEBANDING:

Do the following mod. to T10 on the foil side of pc board.

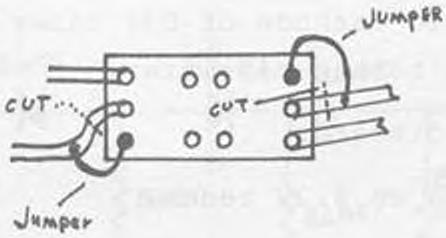

RX ADJ:

Peak T4,T3,T5,T6,T7,T2,T1.

VR15 A.G.C.

VR3 Local Adjustment.

VR2 Squelch Range.

VR1 S Meter.

TX ADJ:

Peak T13,T10,L10,L7.

VR6 AM Power Adj.

VR8 AMC Adj.

VR4 Carrier Null.

VR7 SSB ALC.

VR9 RF Power Meter.

J.C.PENNEY 981-6247 CLARIFIER

1. Clip R24.
2. Clip D5.
3. Remove D4 and install a solid wire jumper in its place.
4. The value of C17 can be altered slightly for more slide.
5. Solder one end of an Orange wire to the unused end of the Fine Tune control.
6. Solder the other end to the emitter of Q44 voltage Regulator.
7. Add a 47ufd/25V Electrolytic Capacitor on the Fine Tune control. Solder the + lead to the Orange wire (added above) and the - lead to the Black lead.

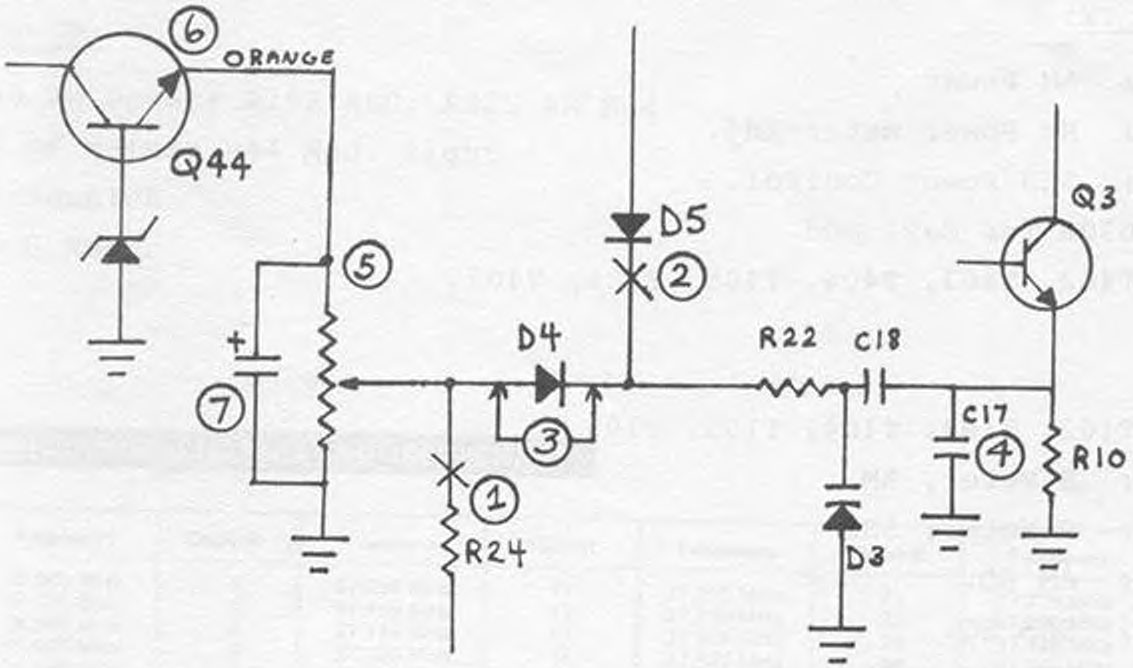

ADD VARIABLE TRANSMIT F_0 TO J.C.PENNEY 6248

Follow these steps carefully.

1. Clip D710.
2. Remove R711 and install a solid wire jumper in its place.
3. With a voltmeter, measure the voltage on both ends of the Fine Tune control. One end should be OV and the other end 8V. Follow the wire which is connected to the 8V line and cut this wire into at the plug, HP1.
4. Resolder the end of this wire to pin 2 of 1C502.

5. D702 may be replaced with Super Diode or use Super Slide in series with stock varactor.

TUNE UP TX:

RT301; AM Power
RT401; RF Power Meter Adj.
RT402; SSB Power Control.
Clip D302 for max. mod.

Adjust T402, T403, T404, T405, T406, T407.

RX:

Adjust T102, T103, T104, T105, T106
RT104; S Meter, AM
RT105; S Meter, SSB
RT102; AM SQ.
RT103; SSB SQ.
T702; is VCO Coil.

* See Vol. 8 Page 24 for Frequency Expansion.

CLARIFIER:

Quick & Easy!

Refer to Drawing:

1. Jumper 1 to 3.
2. Cut trace at 2 or remove wire going to D44-R143.

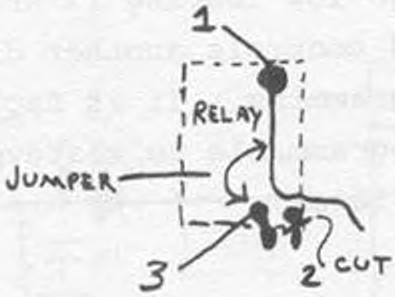

TUNE-UP:

R189 AM Power; R192 ALC; R129 AM Mod

R56 RF Meter; R44 Mod. light

R78-Squelch

R77-S Meter

FREQUENCY-CHANNEL NUMBER CHARTS

Frequency	Channel	Frequency	Channel	Frequency	Channel	Frequency	Channel
26.965 MHz	1	27.085 MHz	11	27.215 MHz	21	27.315 MHz	31
26.975 MHz	2	27.105 MHz	12	27.225 MHz	22	27.326 MHz	32
26.985 MHz	3	27.115 MHz	13	27.255 MHz	23	27.335 MHz	33
27.005 MHz	4	27.125 MHz	14	27.235 MHz	24	27.345 MHz	34
27.015 MHz	5	27.135 MHz	15	27.245 MHz	25	27.355 MHz	35
27.025 MHz	6	27.155 MHz	16	27.265 MHz	26	27.365 MHz	36
27.035 MHz	7	27.165 MHz	17	27.275 MHz	27	27.375 MHz	37
27.055 MHz	8	27.175 MHz	18	27.285 MHz	28	27.385 MHz	38
27.065 MHz	9	27.185 MHz	19	27.295 MHz	29	27.395 MHz	39
27.075 MHz	10	27.205 MHz	20	27.305 MHz	30	27.405 MHz	40

PRESIDENT ADAMS (858)

The Adams frequency conversion is slightly different due to the SCAN feature incorporated into the chip program select lines. Unlike the others, this one switches the address lines to ground and the normal pin status is +5V supplied through 100K resistors. It does not have the 4700 ohm resistors from each pin to ground. D708 (14), D710 (15), D712 (16), D714 (17), D716 (18), D718 (20) make up the "Channel 9" monitor. When pin 2 of IC702 goes low, address lines 20, 18, 17, 16, 15, and 14 (19 is low also because it is grounded-more on this in a minute) go low leaving 13 and 21 high which is the code for channel 9. Pin 14 controls another diode matrix which has jumper wires for field programming. It is factory encoded for channel 19, but is easily field programmable to whatever frequency you want (Home Channel-more on this later).

FOLLOW THESE STEPS:

1. Locate pin 19 of the 858 chip and isolate by cutting PC foil away from ground. An XACTO knife with #11 blade works perfect.
2. Obtain two IN914 diodes and twist the anodes together. Wrap this around one end of a 100K/¼W resistor and .01/50V disc capacitor. It should look like this:

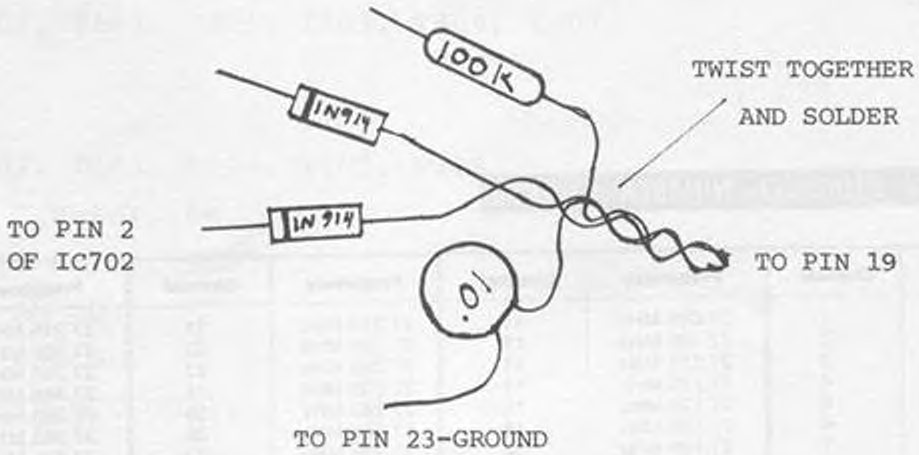

Solder the four leads together and then solder it to pin 19.

FIG. 1

3. Solder the other end of the capacitor to ground (pin 23).

4. Solder the free end of one diode to the cathodes of channel 9 encoder diodes or pin 2 of IC 702.

5. Solder the free end of the 100K resistor to pin 1 of RR701 resistor network (5.99V source) or cathode of zener D722.

6. Obtain a SPST switch and ground the center terminal. Run a wire from the end terminal to the free end of the remaining diode. It should look like this:

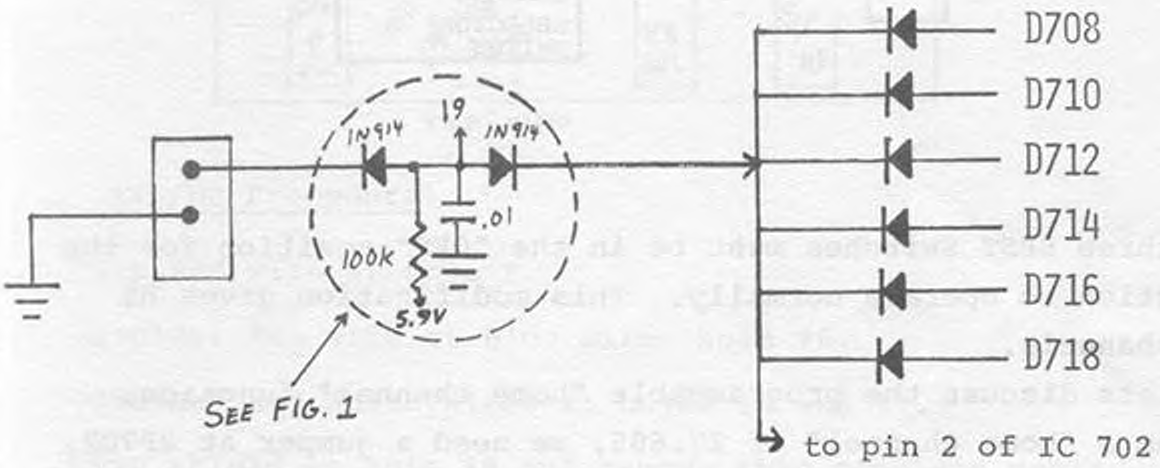

FIG. 2

7. Solder the anode of a 1N914 diode to Pin 20 and the cathode to another SPST switch like this:

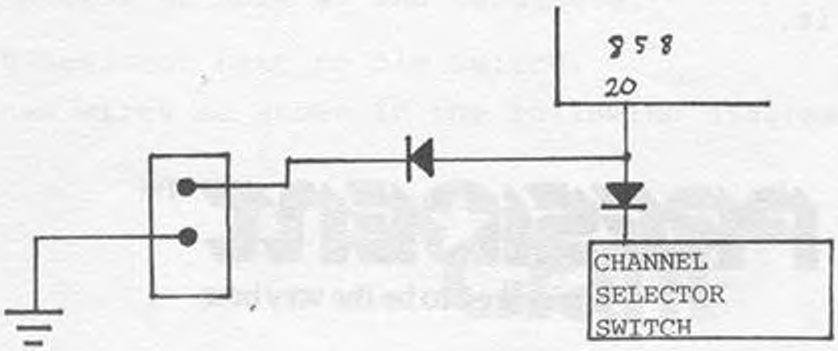

8. Cut the trace on pin 21 between the cathode of D410 and the channel selector switch. Add a SPST switch and wire like this:

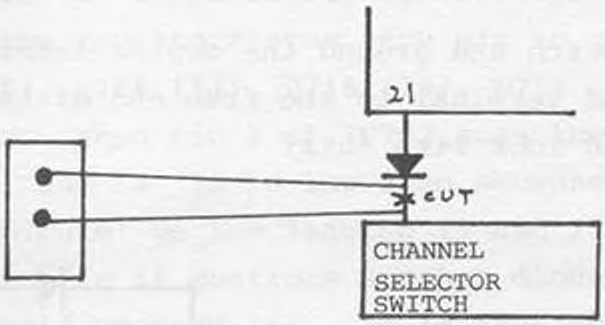

The three SPST Switches must be in the "OFF" position for the SCAN Function to operate normally. This modification gives hi and low channels.

Now lets discuss the programmable "home channel" function. To program a "home channel" of 27.605, we need a jumper at JP702, JP704, JP706 and JP707, since pins 14, 16, 18 and 20 are low and pins 13, 15, 17, 19 and 21 are high. All you need to know to program your particular "home channel" is the truth table for that channel and then install jumpers wherever you need a low or 0. Consult Volume 11 for truth table. This is a great radio. Have fun with it.

PRESIDENT™

Engineered to be the very best.

How to put extra channels on ANL/NB and Brite/Dim Switches.

1. Locate Switch PC Board.

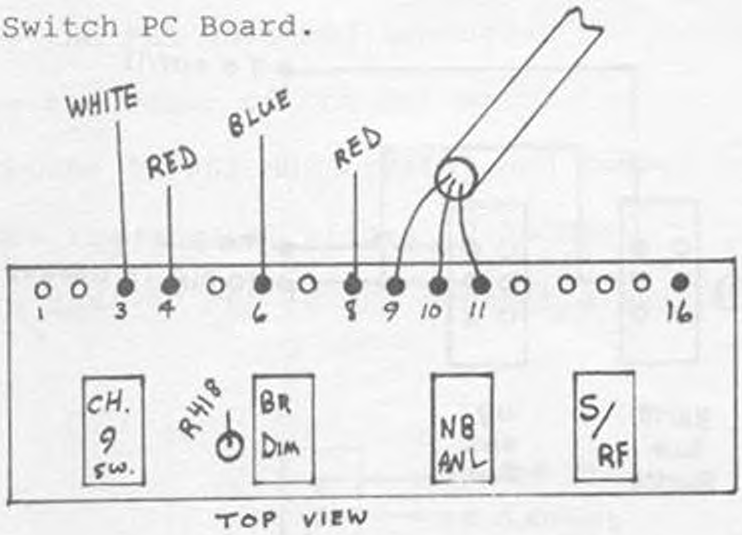

ANL/NB Procedure

2. Clip Red wire at hole 8.
3. Resolder Red wire at Blue wire, hole #6.
4. Clip Red and White wires at holes 10 and 11.
5. Clip shield at hole #9 and remove this complete cable.

Brite/Dim Procedure

6. Clip Red wire @#4 hole.
7. Connect end of Red wire to ground.
8. Clip White wire at hole #3 and terminate.
9. Clip R418 Resistor next to Dim Switch.
   Hook up new wires as shown in the following diagram.

Grant

MODEL 1005002
40·Channel AM/SSB Mobile

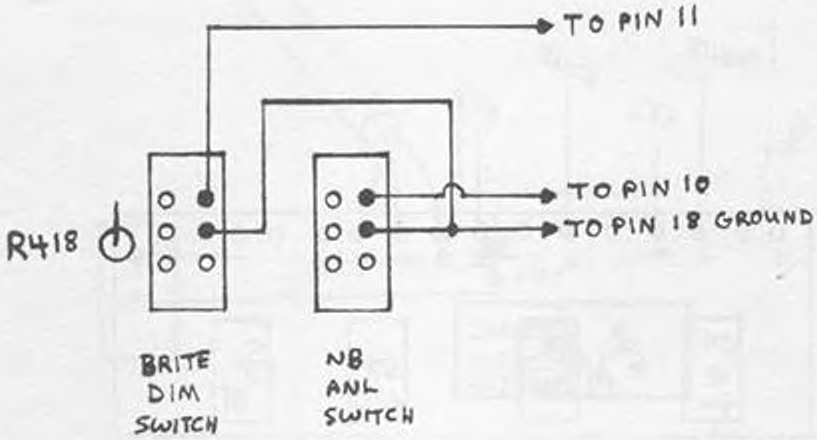

Here are the frequency combinations:
DIM-NB 26.815 to 27.005 (Lows).
DIM-ANL 27.455 to 27.725 (Intermediate).
BRITE-NB Normal.
BRITE-ANL 27.605 to 28.045 (Highs).

Now the meter light and channel LED's will always be on bright and NB is always on.
This makes a neat frequency conversion without using extra "tattle tale" switches and offers front panel convience and driving safety.

PRESIDENT™
Engineered to be the very best.

FREQUENCY EXPANSION:

1. Locate the PLL Unit and remove.
2. Remove the cover of the PLL unit.
3. Locate the 12.063 MHz crystal and remove it.
4. Replace the crystal with a 12.503MHz.
5. Locate M58473P PLL IC and connect a switch as follows:

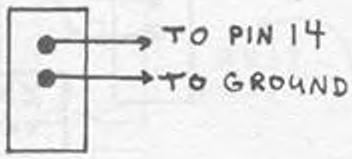

6. For a 15KC Slide, replace the varactor with our Super Diode (located next to crystal.)
7. Reinstall the PLL unit.

For other channels and clarifier information see Volume 11 page 21.

****

Write for a copy of our FREE CATALOG! We accept VISA/MC.

ROYCE 642 (CCI 3001)

FREQUENCY EXPANSION - UP TO 27.595

1. Cut the trace between collector of Q23 and pin 4 of IC8.
2. Cut trace between channel selector and pin 11 of IC9.
3. Cut trace between channel selector and pin 12 of IC9.
4. Wire two SPST Switches as shown:

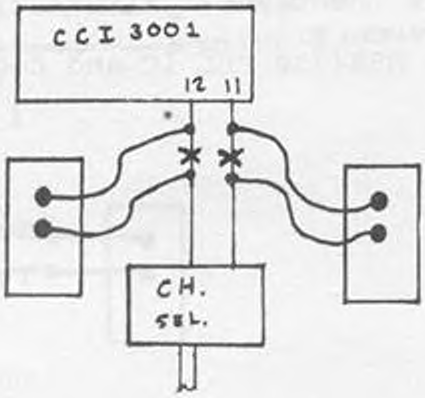

CLARIFIER:

1. Cut Green wire (from clarifier) at board (62) near D8 (located between T2 and T9). Ground this wire.
2. Cut White wire (from clarifier) at board (68) near D9 (located between T1 and Relay).
3. Solder one end of a 10K variable resistor to the emitter of Q18 (87). Solder other end to ground.
4. Solder the White wire to the wiper. Adjust pot for most "up" slide without "dropout".
   L10 is VCO; D19 is VCO Varactor.
   D13 is Varactor. A super slider can be connected in series with D13 or D13 may be replaced with a Super Diode.

XMTR TUNE UP:

VR11 is SSB ALC.
VR7 is AM AMC (or remove Q16).
Peak T8, L4, L3, L2, T9, L12.

SOMMERKAMP TS-788DX MODIFICATION

Another exciting feature of the Sommerkamp TS-788DX is its easy conversion down to 26.000MHz. The following steps will show you how:

1. Remove the covers.
2. Turn the unit up-side-down to locate the jumper points in the next steps.
3. There is a jumper near IC20 to IC21. Unsolder to remove it. It will no longer be needed. This is labeled D & E on the photo.

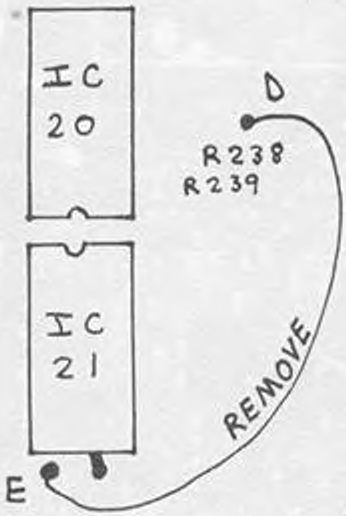

4. Locate the jumper near IC14. Unsolder the end of the jumper nearest IC14 at point B and resolder to point C (pins 12 & 13 of IC14). Normally the jumper is between A and B. Move it to A and C as shown below. Also reference to the photo. NOTE: When I soldered the jumper to C it was not making contact with pins 12 & 13, rather than lift the whole board I was able to heat pins 12 & 13 to get contact. USE CAUTION! An Ohmmeter may be used to check for an open from C to pin 12 & 13.

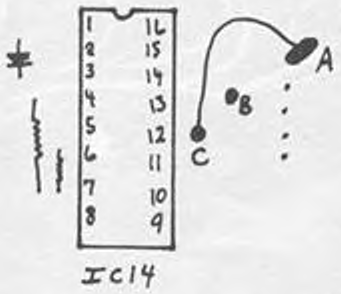

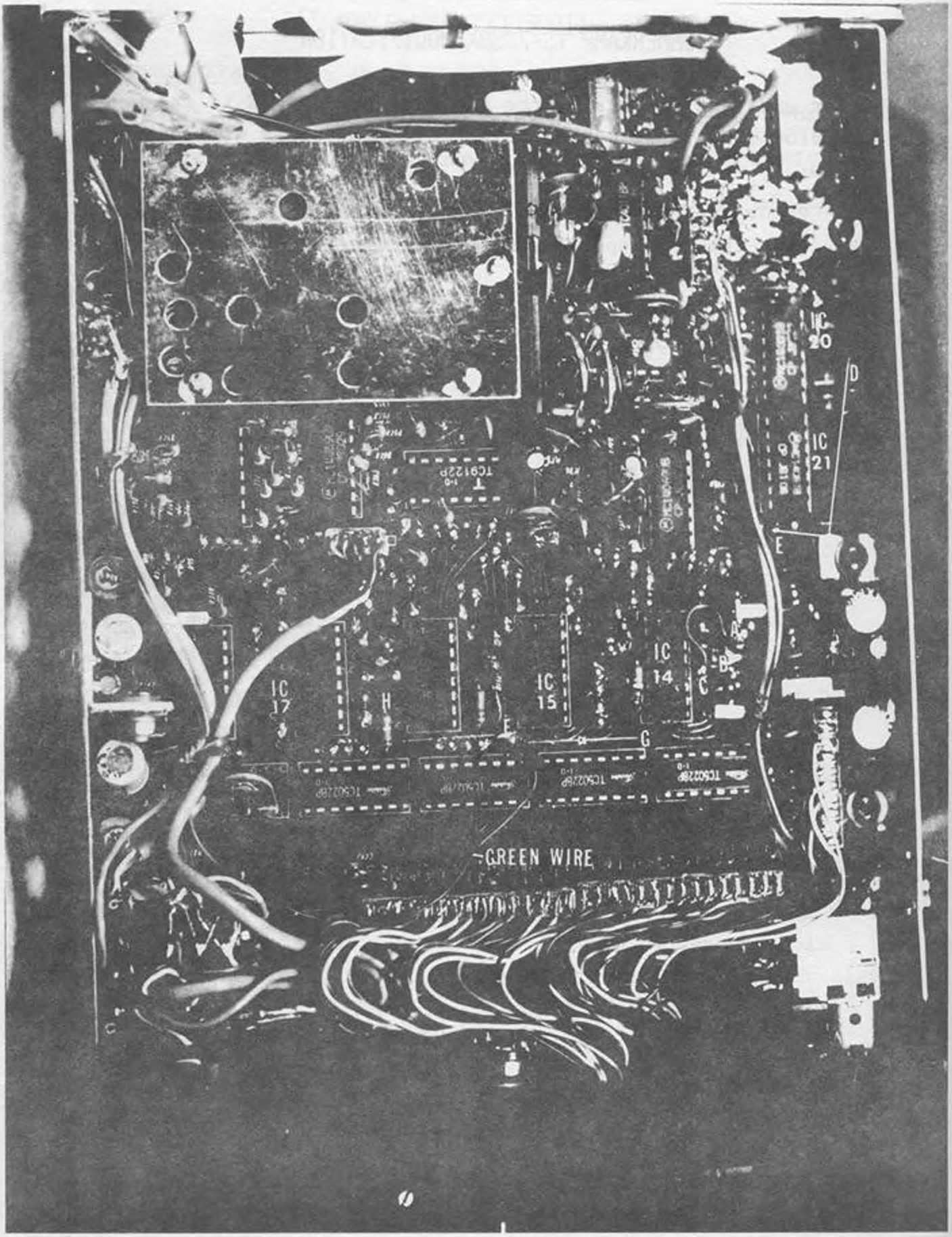
IC 20
IC 21
IC 17
IC 15
IC 14
GREEN WIRE

5. Connect the GREEN wire to the pad (labeled F) closest to IC15. Refer to the photo for exact location.

TUNE-UP:

VR20 AM power
VR21 FM-CW-SSB power } located inside RF Power Unit

L8, L9, L10, L12, L14, TC4 - peak for maximum power with good forward drive and frequency coverage.

Actual output power as measured on our test unit was:

AM: 30W dead key, 45W with tone
SSB: 45W PEP
FM: 58W

NOTE: Counting down from 29.999 to 26.000 and back to 29.999 was fine. When the counter was advanced forward from 29.999 the display should read 26.000. It did not - it jumped to 24. To eliminate this glitch add a .1 ufd bypass capacitor on pin 14 of IC14 to pin 8 (ground) of IC14.

When power is removed from unit to disable memory, unit will go to 26.000 when turned to on. When turned to "ch. 9", unit will go to 26.500. If you would like "ch. 9" to read 27.505, add a 1N60 and a jumper to the points shown below:

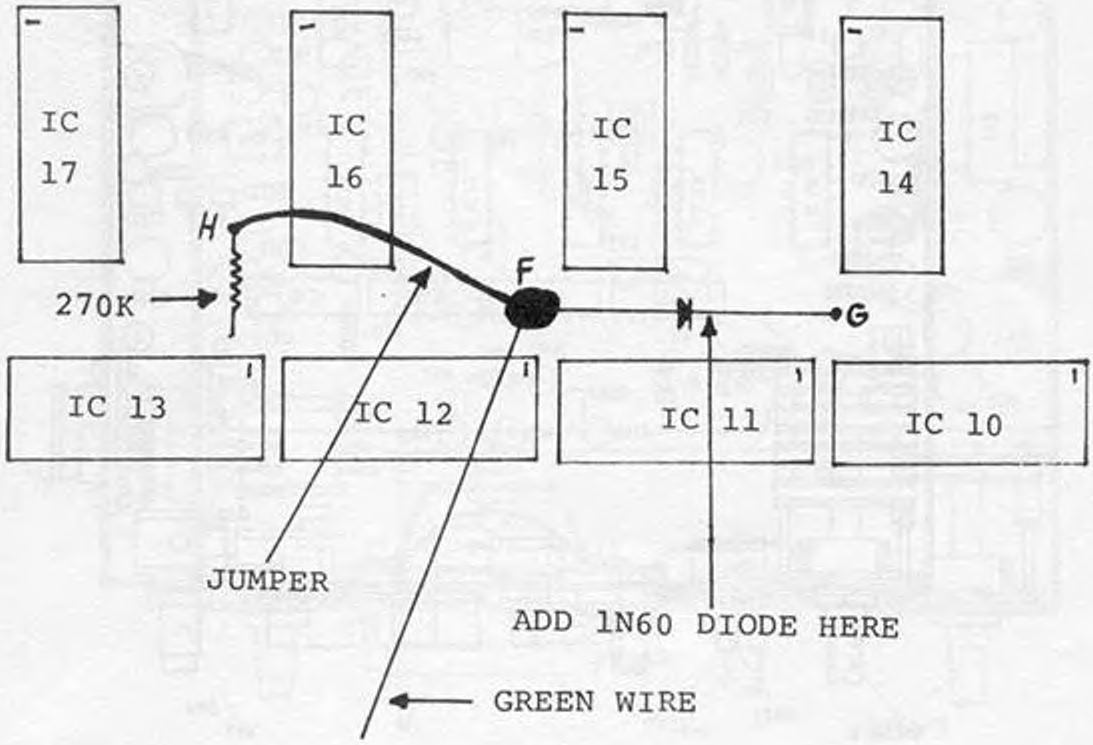

COMPLETE PARTS LAYOUT

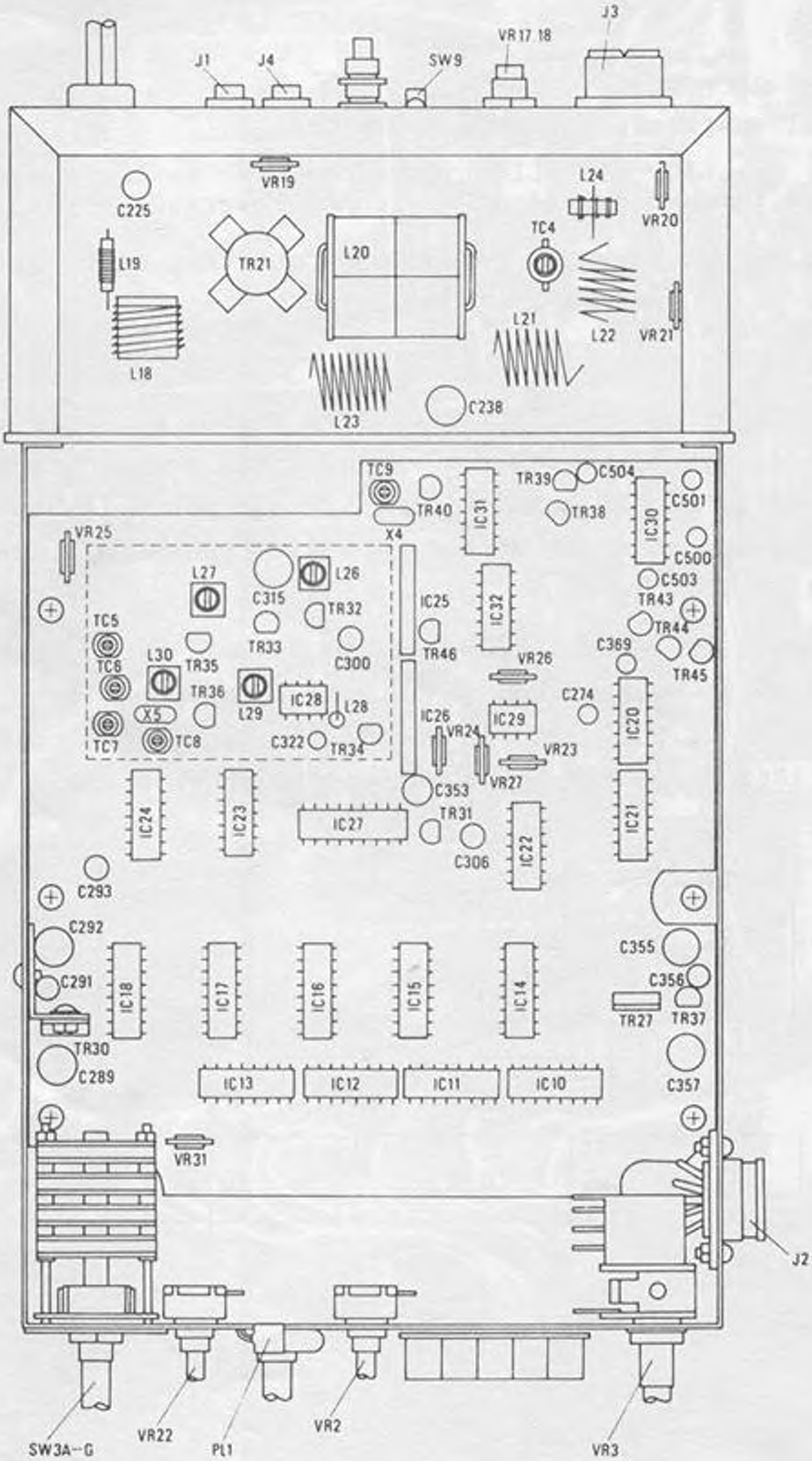

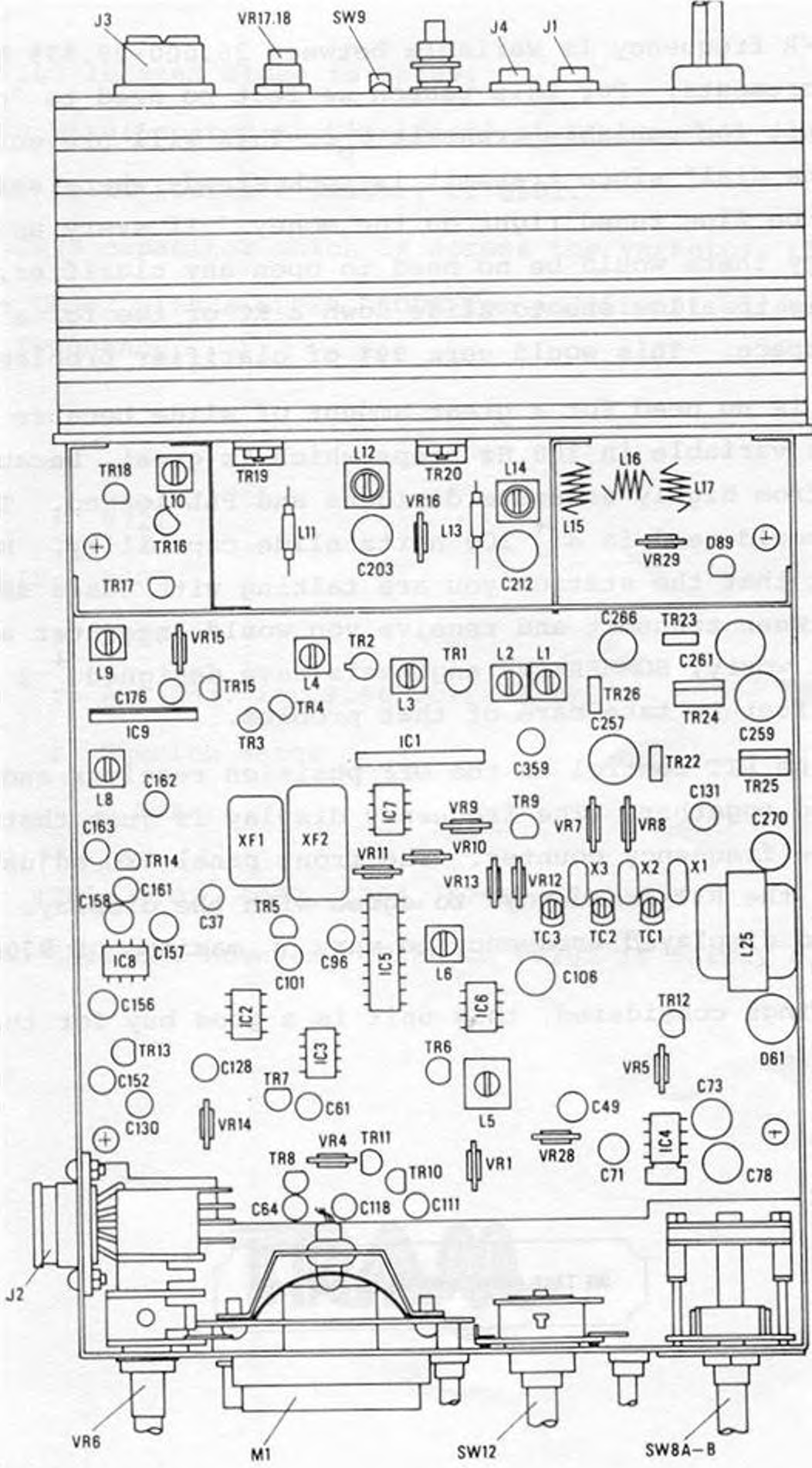
J3
VR17.18
SW9
J4
J1
TR18
L10
TR16
TR17
TR19
L12
TR20
L14
L16
L17
L11
VR16
L13
L15
C203
C212
VR29
D89
L9
VR15
L4
TR2
TR1
L2
L1
C266
TR23
C261
C176
TR15
TR4
L3
TR26
TR24
IC9
TR3
C257
C259
IC1
C359
TR22
TR25
L8
C162
C131
IC7
VR9
TR9
VR7
VR8
C270
C163
XF1
XF2
TR14
VR11
VR10
VR13
VR12
X3
X2
X1
C158
C161
C37
TR5
TC3
TC2
TC1
L25
IC8
C157
C96
IC5
L6
C101
C106
C156
IC2
IC6
TR12
TR13
IC3
TR6
VR5
D61
C152
C128
TR7
C61
L5
C73
C130
VR14
C49
IC4
VR4
TR11
VR28
C71
C78
TR8
TR10
VR1
C64
C118
C111
J2
VR6
M1
SW12
SW8A–B

RIT Clarifier System:

The T/R frequency is variable between 26.000-29.999 MHz in 100 hertz increments. For this reason we felt no need to "open" the RIT circuit for variable transmit F_o. This will prevent "walking around the dial" since transmit is rock steady where set. Receiver can then be fine tuned right on the money. If every unit had this capability there would be no need to open any clarifier, since the purpose is to allow one to slide down a KC or two for a clear channel space. This would cure 99% of clarifier problems.

There is no need for a great amount of slide because the frequency is variable in 100 Hz steps which is great, because this is derived from highly accurate dividers and PLL locked. Theoretically all you would need is a $\pm$ 100 hertz slide capability. However, in the event that the station you are talking with has a shift of 600 hertz between transmit and receive you would encounter a problem. But don't worry, SOMMERKAMP engineers have designed $\pm$ 2 KC of frequency offset to take care of that problem.

With the RIT control in the OFF position receiver and transmitter are locked together. The frequency display is just that - a display, not a true frequency counter. The front panel VXO adjustment is used to adjust the RIT frequency to agree with the display. We found the actual and displayed frequency to vary a maximum of 970 cycles.

All things considered, this unit is a good buy for the money.

WE TAKE PHONE ORDERS OR SHIP C.O.D.

TRAM D64 NDC40013 PLL

FREQUENCY CONVERSION-See Vol. 11,page 12-for Johnson 4740.

CLARIFIER:

1. Clip CR107 located close to relay.
2. Clip RED Wire(Located on Clarifier) at PC board.
3. Resolder to 9V Source @ emitter of Q101.
4. Remove C929 capacitor which is across the varactor, CR902.
5. Replace CR902 with a SUPER DIODE for additional slide off center frequency.

TUNEUP:

SSB ALC	:	R721
SSB MIC GAIN	:	R207
AM MOD	:	R217
R517	:	AGC Adj. for 1.56 Volts @ TP1
R516	:	Squelch Range
R507	:	S Meter

TX Align: T701, T702, L702, L704, L706, L709

No SAMS on this one-however, CB286 on PC201 is fairly close.

TRAM

PLEASE
NOTE!

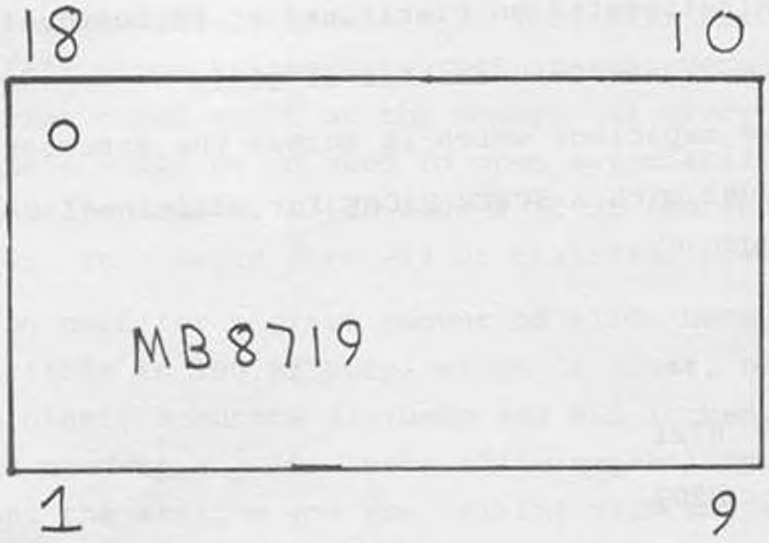

TOP VIEW

On the MB8719 Chips, for some reason, Pin 1 is not where the dot is, that is Pin 18. So be careful when you locate Pin 10.

Pin 18 is chip ground.

Pin 9 is chip 8V source.

Pin 10 is either no connection or is grounded.

ANOTHER 8719 MODIFICATION

COBRA 140/142 GTL
PRESIDENT WASHINGTON
REALISTIC TRC450,ETC.

This gives you coverage from 26.815 to 28.085 with no skips.

1. Cut the trace at pins 10, 11, & 16.
2. Wire 3 SPDT Switches and a CD4070 Exclusive OR gate as diagramed.
3. Remove D25 on Pin 6.
4. Install a 1000 ohm ½W Resistor from Pin 6 to Pin 9 of IC2.

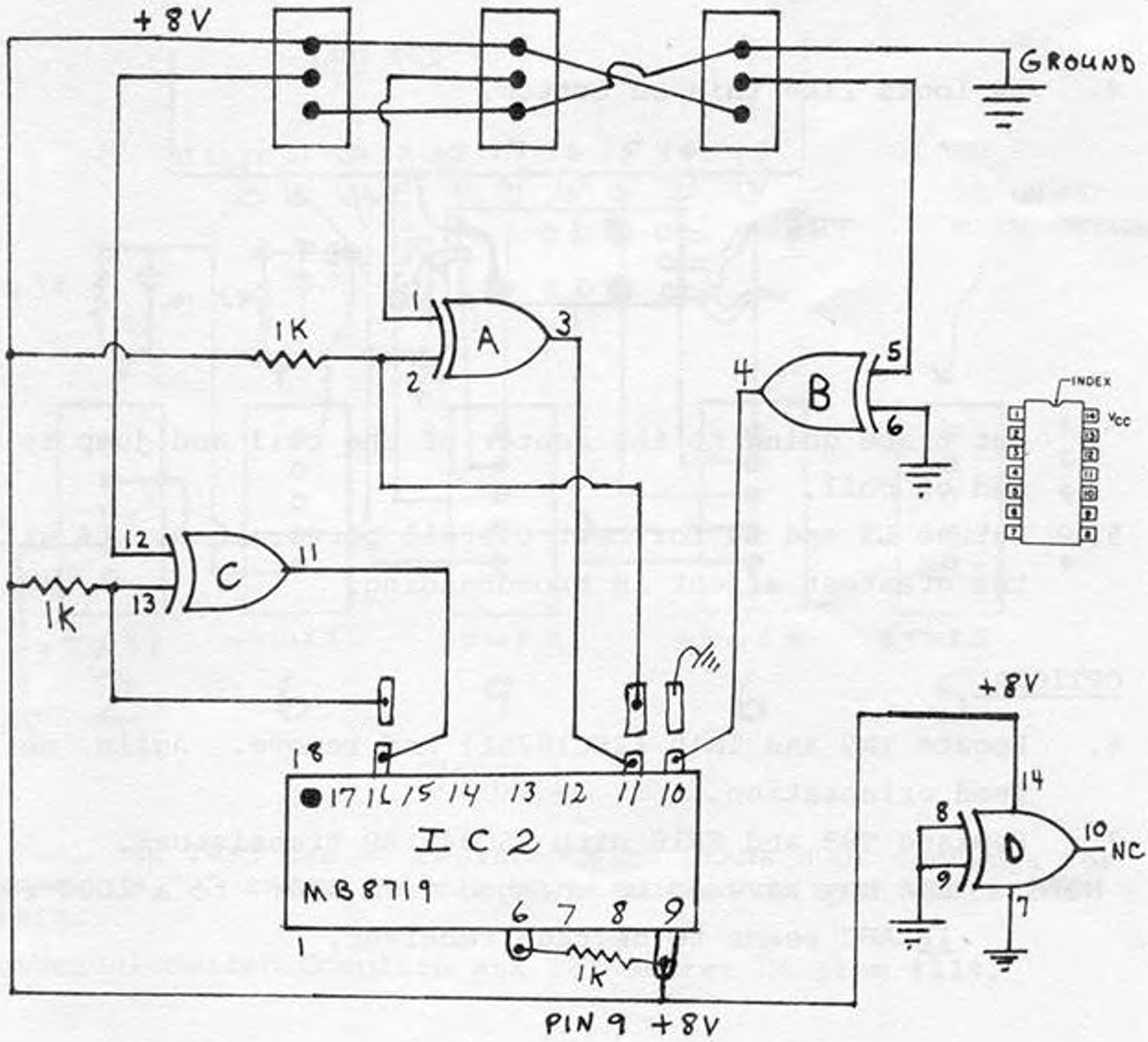

RECEIVER WIDEBANDING FOR 858 CHASSIS

1. Locate TR5 RF AMP Transistor and remove (2SC1730L). Notice how the transistor is orientated.
2. Replace with a 2SC945AP type transistor.
3. Locate L4 receiver RF Coil. It is a double tuned coil.

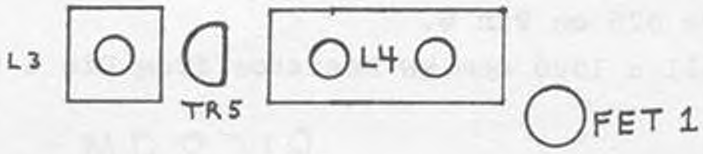

4. L4 looks like this on bottom.

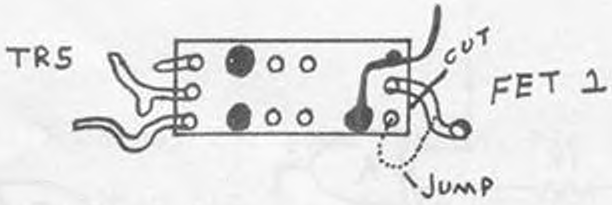

Cut trace going to the center of the coil and jump to the end of coil.

5. Retune L3 and L4 for best overall performance. L4 will have the greatest affect in broadbanding.

OPTIONAL

6. Locate TR9 and TR10 (2SC1675L) and remove. Again, notice lead orientation.
7. Replace TR9 and TR10 with 2SC945 AP transistors.

NOTE: R46 may have to be changed from 330Ω to a 1000Ω resistor IF AGC seems to degrade receiver.

NEW THUMBWHEEL CONVERSION WITH TRUE READOUT FOR 858 CHASSIS

1. Wire up five 10 position BCD type thumbwheel switches* as shown in FIGURE 1.

2. The mixer crystals will have to be changed also. Order 11.269133; 11.268333; 11.267533. Replace the 11.2842 with the 11.267533. Replace the 11.2850 with the 11.268333. Replace the 11.2858 with the 11.269133.

   If you prefer LED readout in addition to the above, you will need three TTL7447 7 segment decoder/drivers and five FND507 or equivalent Common Anode LED's. Wire as shown in FIGURE 2.

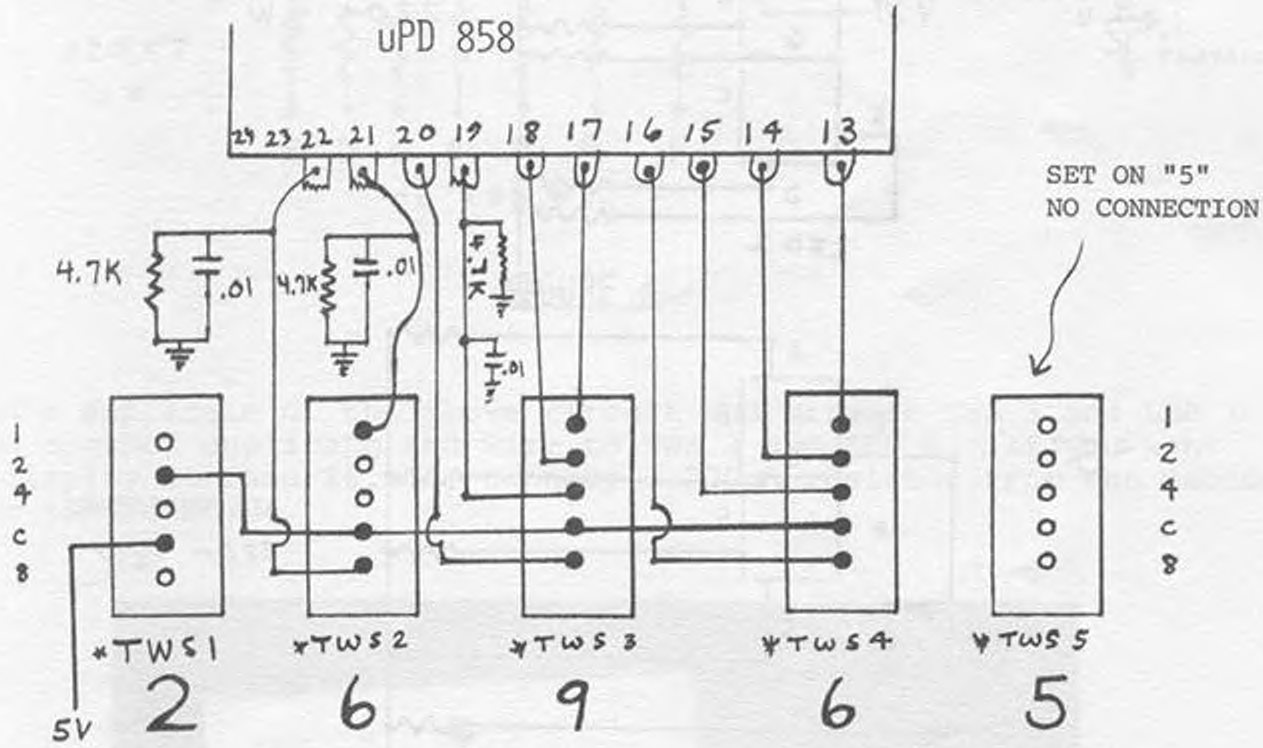

FIGURE 1

NOTE: TWS1 and TWS5 can be replaced with BLANK BODY sections for lower cost. A "2" and a "5" can be stenciled on with white rub on letters.

For Thumbwheel Switch Complete ask for Secret CB Item #129.

NEW THUMBWHEEL CONVERSION WITH TRUE READOUT FOR 858 CHASSIS (Cont.)

Lets say our thumbwheels read 26.975, first we will "hard wire" the "2" and the "5" as these will never change. (LED 1 and LED 5)

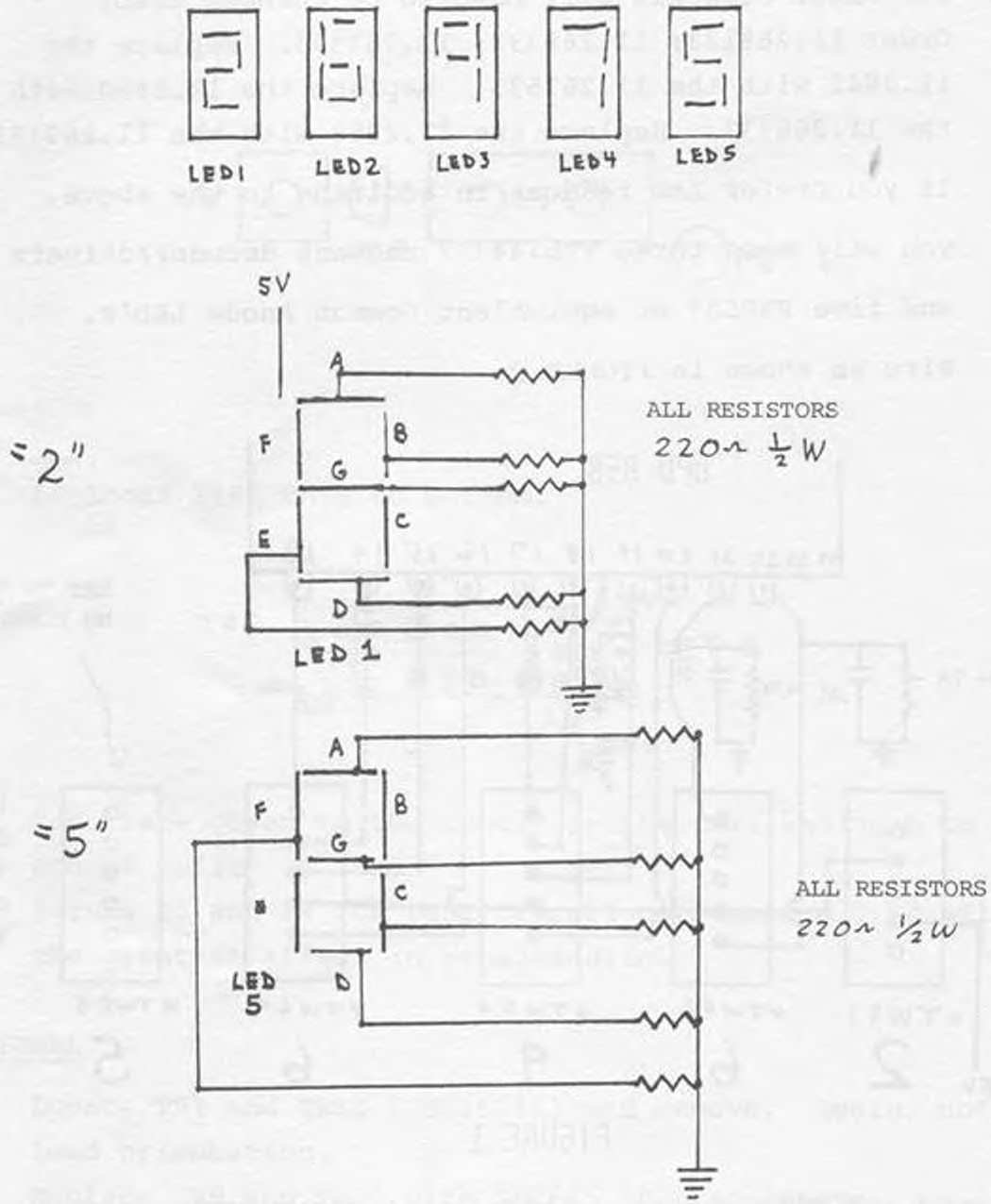

FIGURE 2

Next we will wire LEDs 2, 3, and 4.

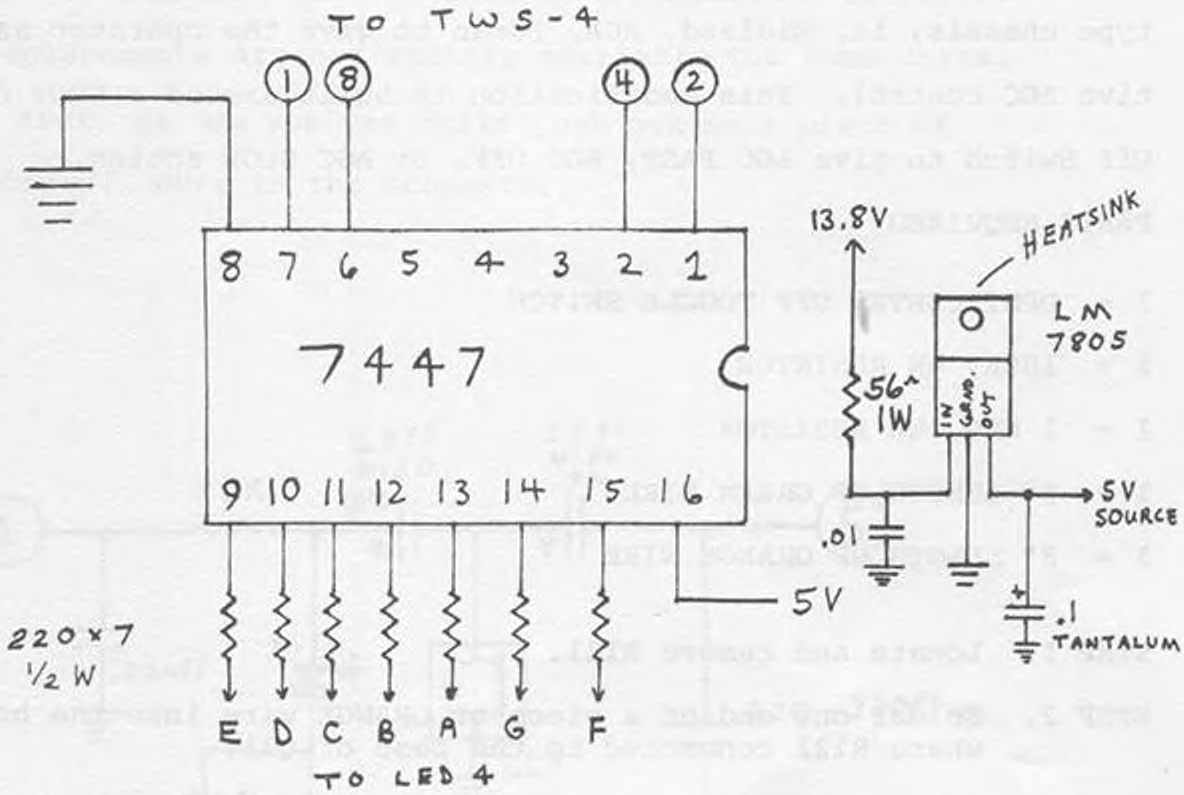

FIGURE 3

Build a duplicate of the above circuit and wire to TWS 3 and LED 3. Build another duplicate and wire to TWS 2 and LED 2. If you want the display to read 26.975, connect a 220Ω resistor from the decimal point to ground.

AGC SELECTOR SWITCH

This practical switch can easily be added to the Cybernet 02-A type chassis, ie, Midland, RCA, Boman to give the operator selective AGC control. This modification is built around a DPDT Center Off Switch to give AGC FAST, AGC OFF, or AGC SLOW action.

PARTS REQUIRED

1 - DPDT CENTER OFF TOGGLE SWITCH

1 - 100K, ¼W RESISTOR

1 - 1 MEG, ¼W RESISTOR

1 - 8" LENGTH OF GREEN WIRE

1 - 8" LENGTH OF ORANGE WIRE

STEP 1. Locate and remove R121.

STEP 2. Solder one end of a piece of ORANGE wire into the hole where R121 connected to the base of Q31.

STEP 3. Solder one end of a piece of GREEN wire into the hole on the other end of where R121 was (+ side of C145).

STEP 4. Install the Switch in desired location.

STEP 5. Solder the two Resistors on the switch as illustrated.

STEP 6. Solder the GREEN and ORANGE wire on the switch.

STEP 7. Reassemble and Enjoy!

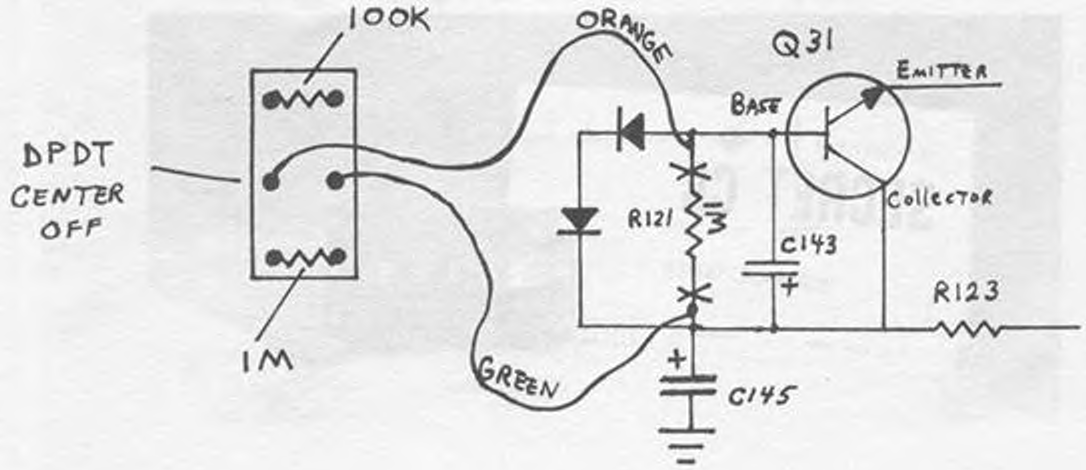

CYBERNET 02A CHASSIS

The VCO block in this Chassis is encapsulated in plastic and replacements are not readily available for some units. Don't fret, as now you can build your own on a piece of perf board. Here is the schematic.

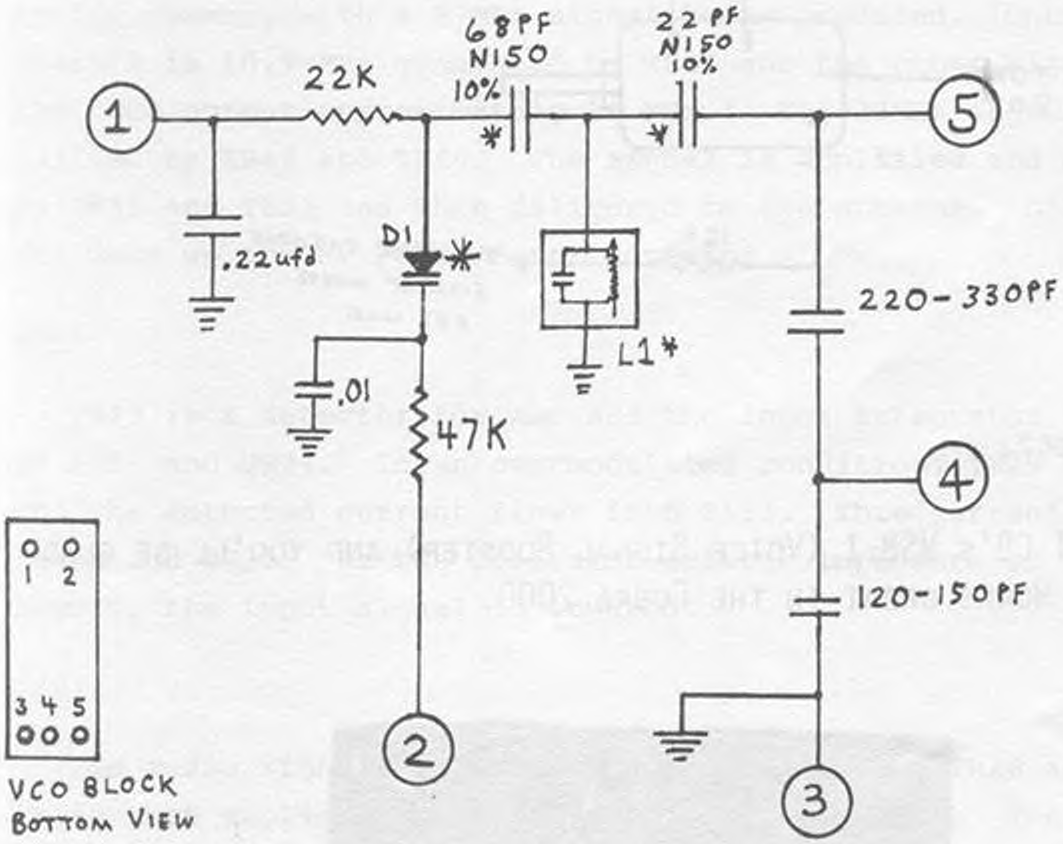

* Use only N150 type Capacitors.
* L1 is an 18MHz coil (Secret CB Item #127).
* D1 is an MV201 or use a super diode (Secret CB Item #28).

HOW TO HOOK UP A 10T POT TO 2000GTL

1. Remove FVL/CVL and tape all loose wires. Replace with a 10 Turn Pot (Secret CB Item #46).

2. Remove D51.

3. Wire up pot as shown:

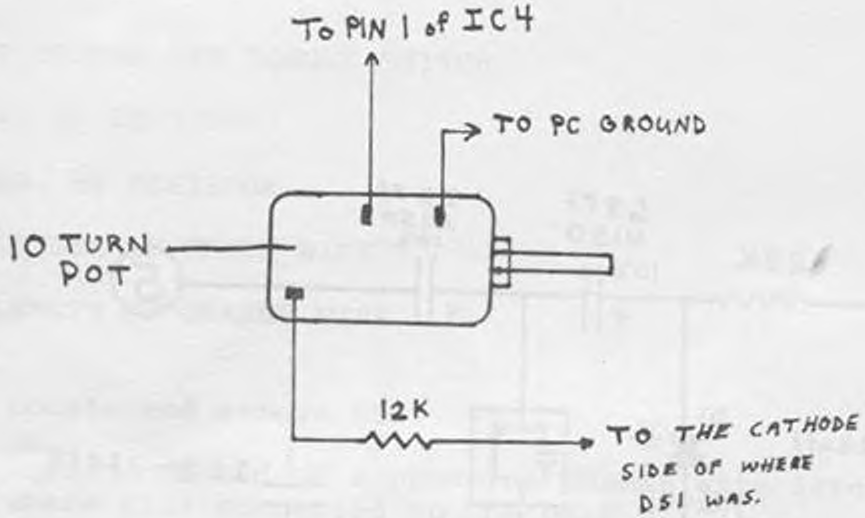

4. Clip D52.

TRY SECRET CB's VSB-1 (VOICE SIGNAL BOOSTER) AND YOU'LL BE GLAD YOU DID! WORKS GREAT IN THE COBRA 2000.

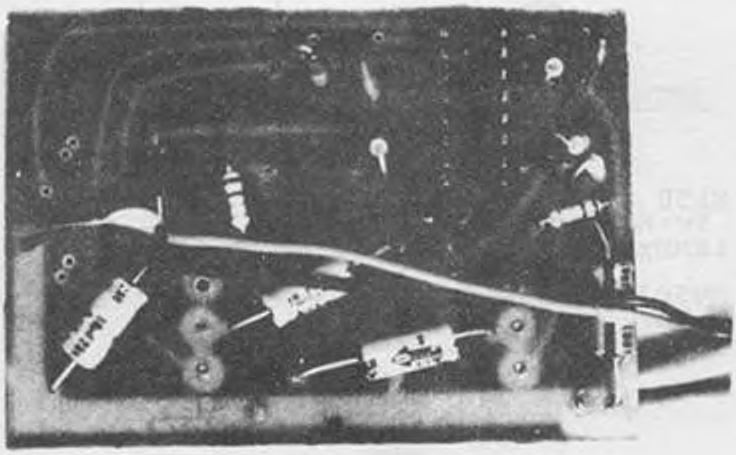

TRANSMITTER/RECEIVER OPERATION OF
COBRA 146GTL, PRESIDENT AR144, SEARS 663.38100050
REALISTIC TRC451, TYPE CHASSIS

Reference: Block Diagram, Volume 12 page 11

AM OPERATION, TX:

An AF signal from the MIC is fed to TR26 through TR27. This signal is amplified by TR26 and TR25, Mic Amp, and is fed to TR42 and TR43. The signal amplified by TR44 is applied to TR39 and TR38 for modulation. For the RF portion, two signals are mixed by IC5, mixer, with a 27MHz signal being produced. (One of these signals is 10.7 MHz generated by TR23 and the other signal is the VCO output approximately 16 MHz.) The 27MHz signal is amplified by TR41 and TR40. The signal is amplified and modulated by TR39 and TR38 and then delivered to the antenna. D52 and D53 make up the RF Power Meter detector.

AMC:

TR29 is a detector for AMC and the input attenuator consists of R157 and TR27. In an overmodulated condition, TR29 turns on and the detected current flows into R153. This current drives TR 28 and TR27. As the collector-emitter inpedance of TR27 lowers, the input signal is lowered.

SSB:

The audio signal from the MIC is amplified by TR26 and TR25. It is then applied to the Balanced Modulator, IC3. The carrier signal (10.6925 USB; 10.6975 LSB) is applied to the other input of IC3. IC3 produces a carrier-suppressed double sideband signal. The DSB signal is converted into SSB by the filter FL1. In the USB Mode, carrier plus audio signal is produced; in the LSB Mode, carrier minus audio signal results.

EXAMPLES: USB Mode:

Using a 1KC tone, two signals are produced:

(USB) 10.6925MHz + 1KHz = 10.6935MHz

(LSB) 10.6925MHz - 1KHZ = 10.6915MHz

LSB Mode:

(USB) 10.6975MHz = 1KHz = 10.6985MHz

(LSB) 10.6975MHz - 1KHz = 10.6965MHz

The center frequency of the crystal lattice filter is 10.6950 and will pass ± 2.5KC or 10.6925 - 10.6975. So, on USB, the 10.6935 signal is passed but the 10.6915 signal is attenuated. In LSB the 10.6965 signal is passed and the 10.6985 signal is attenuated.

The SSB signal is then mixed with the VCO frequency by IC5 and the resulting 27MHz is amplified by TR41, TR40, TR39, TR38 and fed to the antenna.

ALC:

TR37 is the ALC detector. If the power level exceeds a level set by VR6, TR28 drives TR27 to decrease the audio input to IC3, thereby lowering SSB Power.

UNLOCK DETECTOR:

TR33 shuts off the transmit output if the PLL is unlocked by turning off TR32. Pin 15 of IC2 goes low in an unlocked condition.

RECEIVER:

A signal from the antenna is fed to RF Amp TR12. It is then mixed with the VCO frequency at TR13 which produces the IF frequency of 10.7MHz. This 10.7MHz signal is amplified by TR14, TR15, TR16, and TR17. In the AM Mode, the signal is detected by D22 and D23 and sent to TR10, the AF amp.

In SSB Mode, the signal is fed to TR10 which operates as a demodulator. A signal from the carrier oscillator is necessary for this; the clarifier must be "user adjusted" for best audio intelligibility. The signal is then routed to the AF Power Amp, IC4 via TR11 (Squelch Switch) and TR36 (AF Driver). It is then sent to the speaker.

AGC:

IC1 is the AGC amp. The processed signal is switched by TR8 and TR9 and fed to TR14 and D13/D14 which adjusts the IF and RF gain respectively. Part of the signal from IC1 also goes to the squelch control circuit (TR11).

TRC 448
VSB-1 HOOK-UP

COMPRESSOR:

1. Remove C95.
2. Solder Black wire to + side of hole.
3. Solder White wire to other hole.
4. Remove AMC control Q14.

(C95 is a 1 ufd. close to Q15.)

EXPANDOR:

1. Remove C274 (.022).
2. Solder Black wire towards collector of Q210.
3. Solder White wire towards R253.

No Pre-Amp needed.

MIDLAND 77-0004 4001

VSB-1 HOOK-UP

COMPRESSOR:

1. Remove Q202.
2. Lift end of RFC308 that connects to Mic Gain.

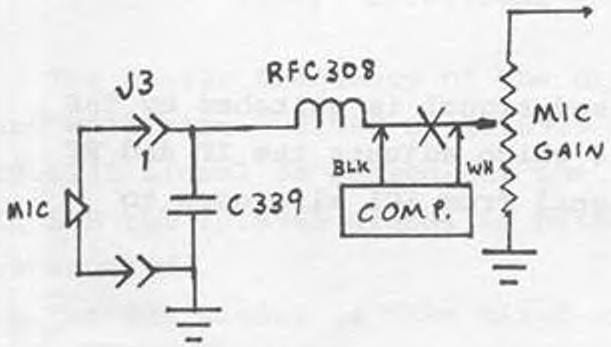

Connect as shown:

Will probably need to use power Mike for best results.

EXPANDOR:

1. Remove C121.
2. Install Pre-Amp as follows:

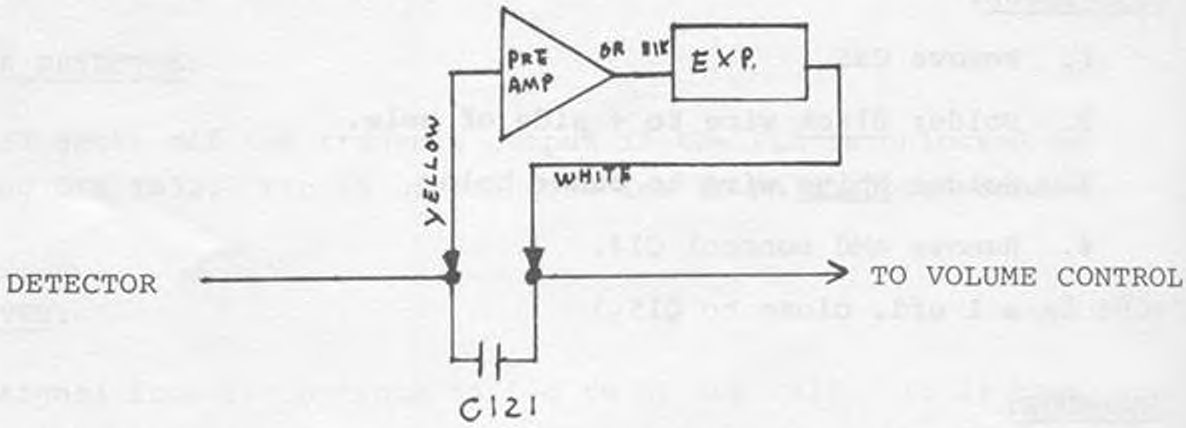

TROUBLESHOOTING CLARIFIER PROBLEMS ON THE 858 CHASSIS

COMMOM PROBLEMS:

A. Distorted Output

B. Warble

C. Drift

D. Sounds like mike is under water

E. Weird FM effects

COMMON CAUSE:

Main power supply,Zener/IC Regulators, Voltage feed circuits, primarily those concerned with the VCO and PLL sections.

Power supply regulation problems are often caused by leaky or dried out electrolytic filter capacitors. I always change the original filter cap. (commonly a 1000-3300uf/25V) to a 5600uf/50V.

Another possible cause is in the design of the power supply. Common practice is to design the unit with the minimum adequate power supply (current) to hold costs down. Then you have problems after you tune it up. The only answer is to redesign the power supply.

Also, the more slide that you have installed, the more <u>critical</u> the voltage regulation becomes. A 4 to 1 ratio over the original range is about the maximum usable slide before modifications to the reference voltage becomes necessary.

An improved type of regulator would be to disconnect the existing voltage line connected to the clarifier pot and insert the circuit shown:

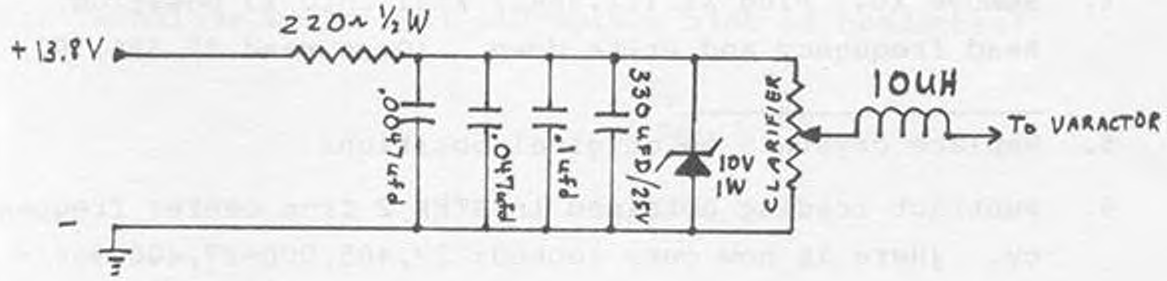

This circuit effectively isolates the reference voltage from all other circuits that could cause voltage fluctuation to the VCO.

Difficulty with the clarifier control usually stems from the VCO circuit itself. The following symptoms are related to each other and adversely affect the clarifier control.

1. Clarifier does not linearly track frequency.
2. Center clarifier position rarely matches center frequency.
3. When using an inductor to tune the crystals to match center clarifier position to center frequency, slide range is lessened.
4. Transmit and receive are not together.

To cure these problems, use the directions below. The purpose of this technique is to figure out the ratio between crystal frequency and output frequency and then calculate the new crystal frequencies you will need.

NOTE: Use tunable coils and be sure you are satisfied with the slide range before beginning. Changing amount of slide could cause the RATIO to change, nullifying your efforts. Let's Begin.

STEP 1. Remove covers. Connect a frequency counter and a dummy load. Set clarifier to center position on channel 40.

2. Key Radio and write down the output frequency. (Ours read 27,400,900.)_____.

3. Remove X3 (11.2858)Xtal. Plug X6 (11.2850) Xtal in its place. Read frequency and write down. (Ours read 27,398,700)_____.

4. Remove X6. Plug X4 (11.2842) Xtal into X3 position. Read frequency and write down. (Ours read 27,396,700) _____.

5. Replace crystals to original positions.

6. Subtract reading obtained in STEP 2 from center frequency. (Here is how ours looked: 27,405,000-27,400,900 = 4,100.) Write your answer here:_____

7. Subtract X6 from X3: 11,285,800 - 11,285,000 = 800. Subtract X4 from X3: 11,285,800 - 11,284,200 = 1,600. Subtract Step 3 from Step 2. (27,400,900 - 27,398,700 = 2,200.) It can clearly be seen that an 800 hertz change in crystal frequency moves the transmit approximately 2,000 hertz in my example. Yours will vary; however the RATIO will be the same.

8. Subtract Step 4 from Step 2. (27,400,900 - 27,396,700 = 4,200) So a 1,600 hertz change in crystal frequency moved the transmit frequency down 4,200 cycles. To shift the frequency up, simply add 1,600 hertz to the X3 crystal frequency. 11,285,800 + 1,600 = 11,287,400. This is how you figure your new X3 frequency.

9. Calculate X4 and X6 Xtal frequencies you want to order:
   X4 = 11,284,200 + 1,600 = 11,285,800
   X6 = 11,285,000 + 1,600 = 11,286,600

10. Place new crystals in their appropriate sockets. To compensate for any remaining errors, set clarifier to center position and adjust the inductor for each particular crystal.

MODE	REC.	XMIT	FREQ. REC.	FREQ. XMIT
AM	X6	X3	11.2850	11.2858
USB	X3	X3	11.2858	11.2858
LSB	X4	X4	11.2842	11.2842

This technique works well and solves alot of headaches!

SUPER REGULATOR

Are you having trouble with poor regulation which is Very Critical in Clarifier Circuits? The National Semiconductor LH0070-1H 10 volt 3 terminal Precision voltage regulator is virtually independent of input voltage, load current, temperature and time.

SPECIFICATIONS:

Input voltage: 12.5V to 40V
Accurate Output Voltage: 10V $\pm$ .01%
Low Output Impedance: .1 Ω
Excellent line regulation: .1mV/V
Low Zener noise: 100 uV p-p
3 lead TO-5 Case
Short Circuit proof
Low Standby current: 3mA
Power dissipation, max.: 600 mW
Output current, max,: 20mA
Operating Temperature Range - 55° c to +125°c

BOTTOM VIEW

Use it-you'll appreciate it!

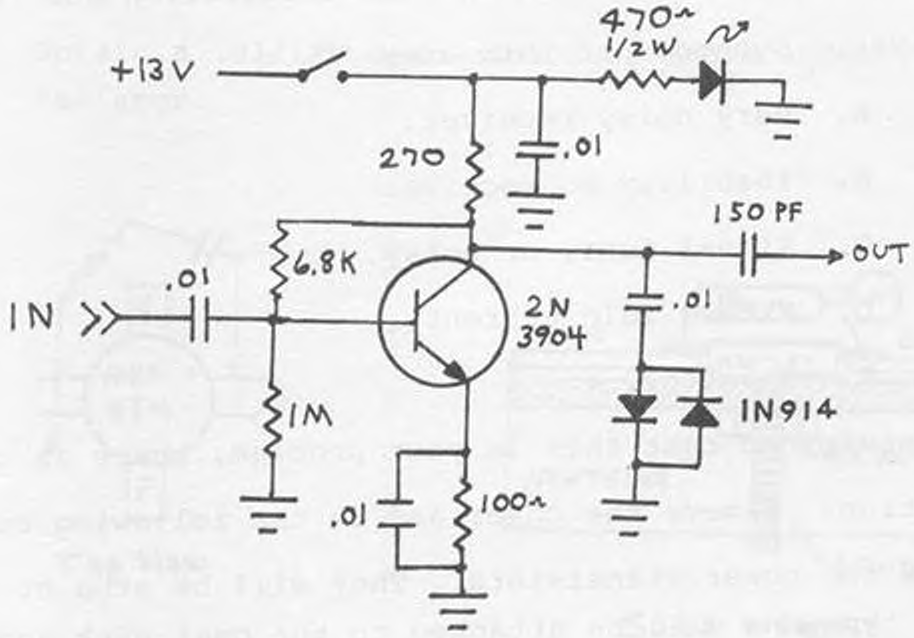

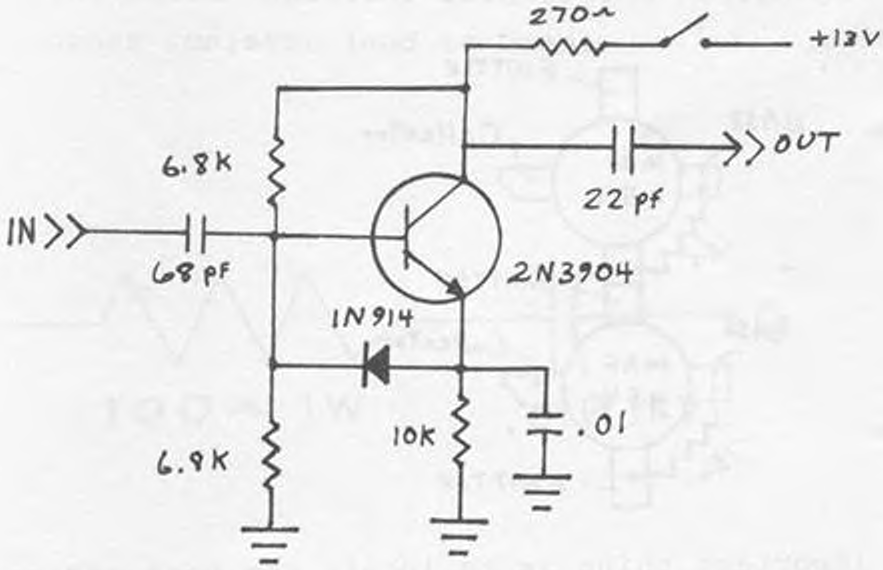

These are popular designs used in various linears.

LINEAR NOTES

Sometimes a new amplifier will break into oscillation and "hang up" the receiver. Symptoms of this are:

A. Very noisy receiver.

B. Inability to receive.

C. Signal fuzzy or noisy.

D. Excess idle current.

E. Splatter.

If you have determined that this is your problem, there is usually a simple solution. Remove the cover and do the following steps:

1. Locate the power transistors. They will be stud or flange mount type and will be attached to the heat sink and look like an aspirin with four gold legs. Usually you will find two that look like this (although this will vary greatly depending on wattage and design).

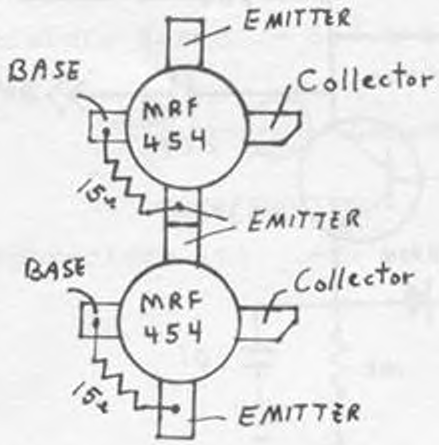

Anyway, the most important thing is to locate the base and collector. Usually the collector is cut at an angle. The emitters (two each) are grounded. There will probably be a 10-22 ohm resistor from the base to emitter.

2. Obtain a .01/1KV disc capacitor and a 100Ω /1Watt carbon resistor.

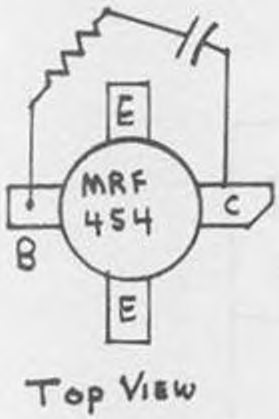

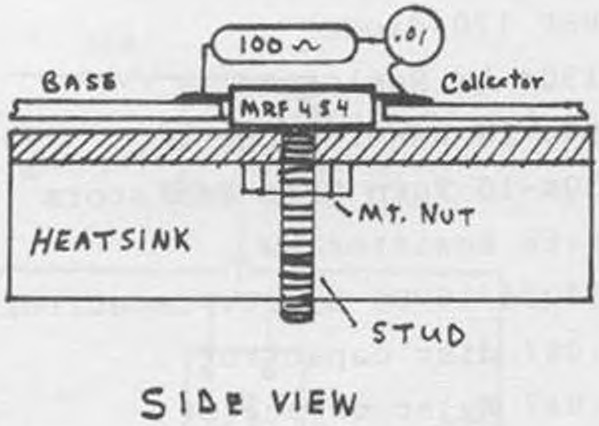

3. Connect resistor and capacitor together and then solder the other capacitor lead to the Collector. Solder the other resistor lead to base.

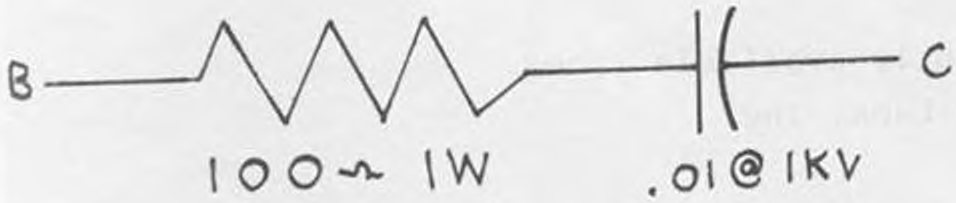

Install the above circuit across each of the power transistors.

MODULATED GUNN OSCILLATOR

Alot of requests for this one, so here it is! The heart of this system is a Microwave Gunn Oscilator on 10.525GHZ (X BAND)*. A 100MW used one can be obtained for about $50.00. A complete unit can be built for under $75.00.

First we need to build a precision tone oscillator.

PARTS REQUIRED

1-HEP 170 diode
1-150Ω ½W Resistor
1-9V/1W Zener diode
2-50K-10 Turn Trim Resistors
1-5.6K Resistor ¼W
1-10ufd/16VDC Elect. Capacitor
1-.047 disc capacitor
1-.047 Mylar capacitor
1-555 Timer I.C.
1-100Ω ¼W Resistor
1-10K ¼W Resistor
1-2N2907A Transistor
1-560Ω ½W Resistor
1-Green L.E.D.
1-DPDT Center off Switch
1-P C Board or perf board

* This item is currently available from:
Lectronic Research Labs, Inc.
1423 Ferry Ave.
Camden, N.J. 08104
(609)541-4200

The schematic is on the following page. Build it with care.

Assemble parts as shown below:

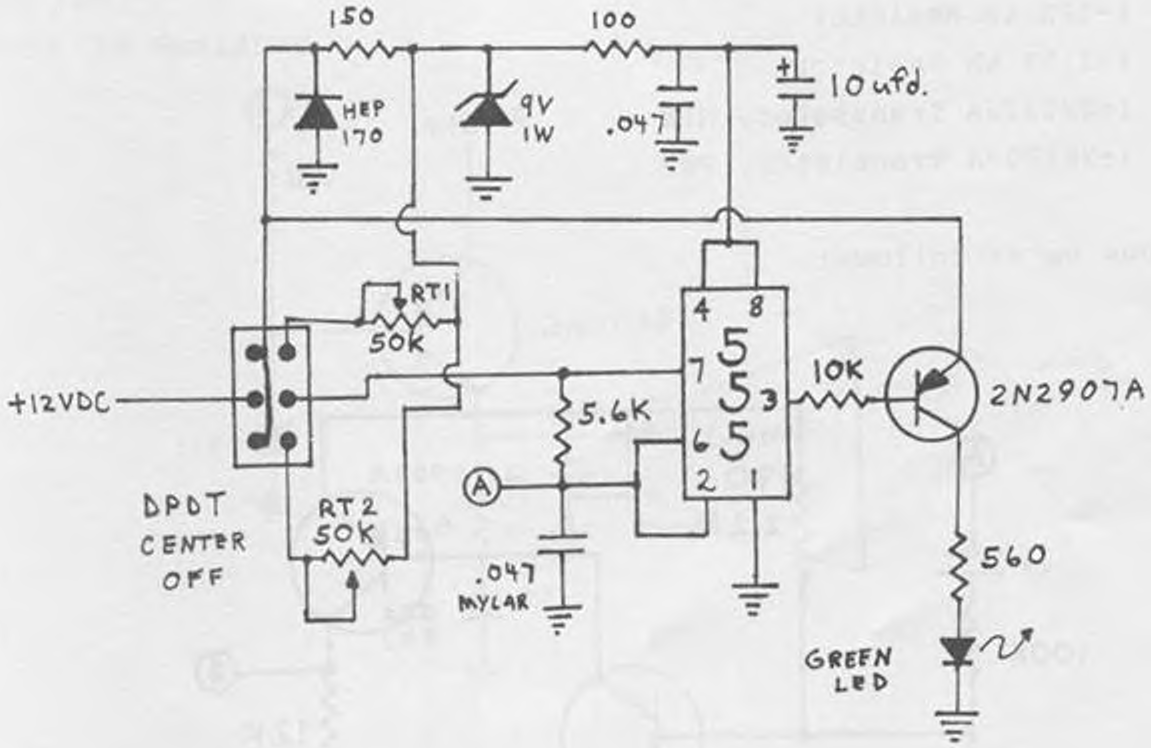

Adjust RT1 so output frequency is 879 hertz (28 MPH).
Adjust RT2 so output frequency is 1696 hertz (54 MPH).
Green LED tells us the tone oscillator is working properly.
Ⓐ connects to Ⓐ in next circuit.

Next we will have to build a voltage amplifier.

Voltage Amplifier Circuit

Parts Required:

1-.1 disc capacitor
1-100K ¼W Resistor
1-220K ¼W Resistor
1-2.2 MEG ¼ W Resistor
1-12K ¼W Resistor
1-1.5K ¼W Resistor
1-2N2222A Transistor, NPN
1-2N2907A Transistor, PNP

Hook up as follows:

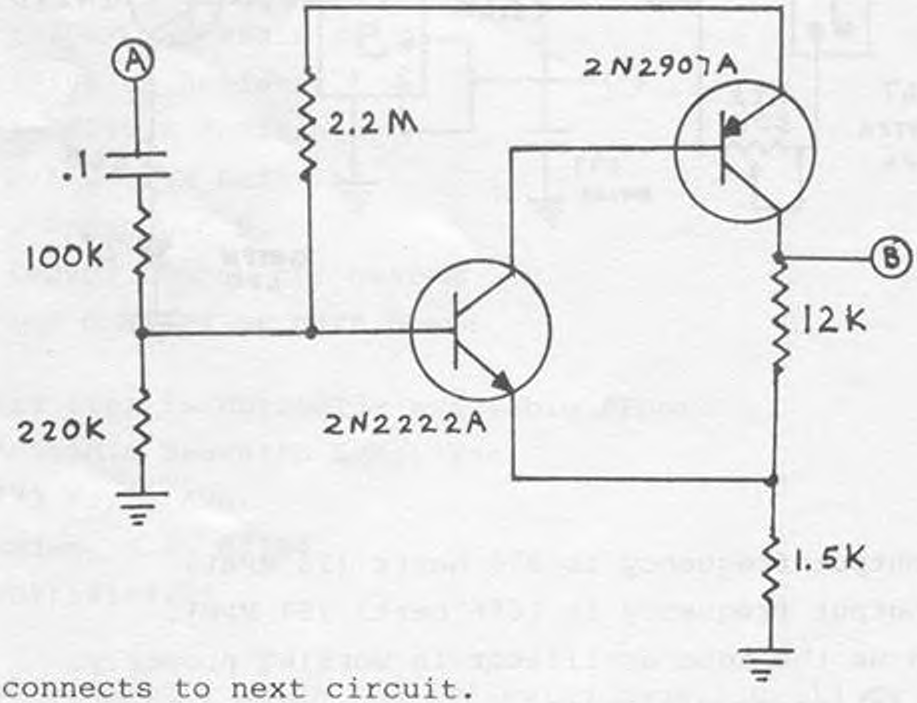

(B) connects to next circuit.

Next we will build the Gunn oscillator voltage regulator.

Gunn Regulator Circuit

Parts Required:

1-2N3055 NPN Transistor + heatsink

1-11V/1W Zener

1-560Ω ½W Resistor

1-Red LED

1-150Ω ½W Resistor

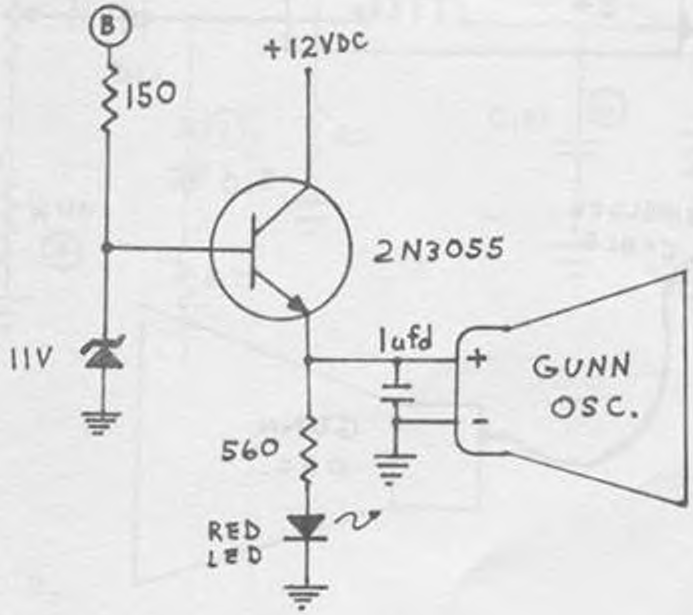

Add a 1ufd/25VDC capacitor on Gunn Oscillator for harmonic suppression.

(B) connects to voltage amp in previous circuit. LED 2 indicates the Gunn Regulator is operating O.K.

NEXT ASSEMBLE.

ASSEMBLE:

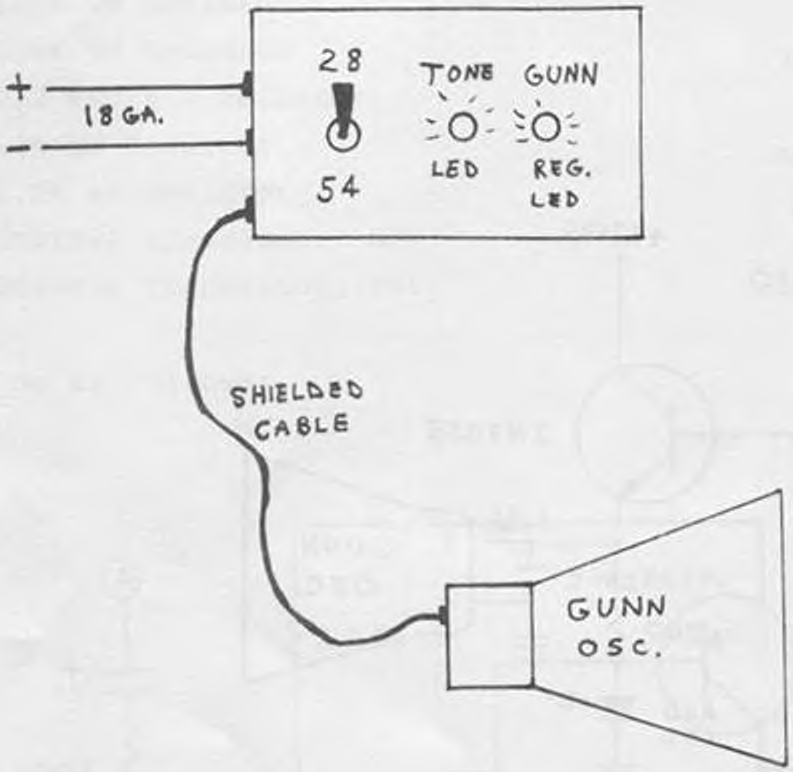

Radio Shack Metal Cabinet #270-251 can be used.

Conclusion: Although alot of truckers are using "Jammers" we do not suggest you actually build the above circuit or you could find yourself in serious trouble with the FCC and Law Enforcement Agencies. We Assume No Responsibility for the use of the material or Consequences thereof.

HOW TO ADD SLIDE TO YOUR COBRA 29GTL

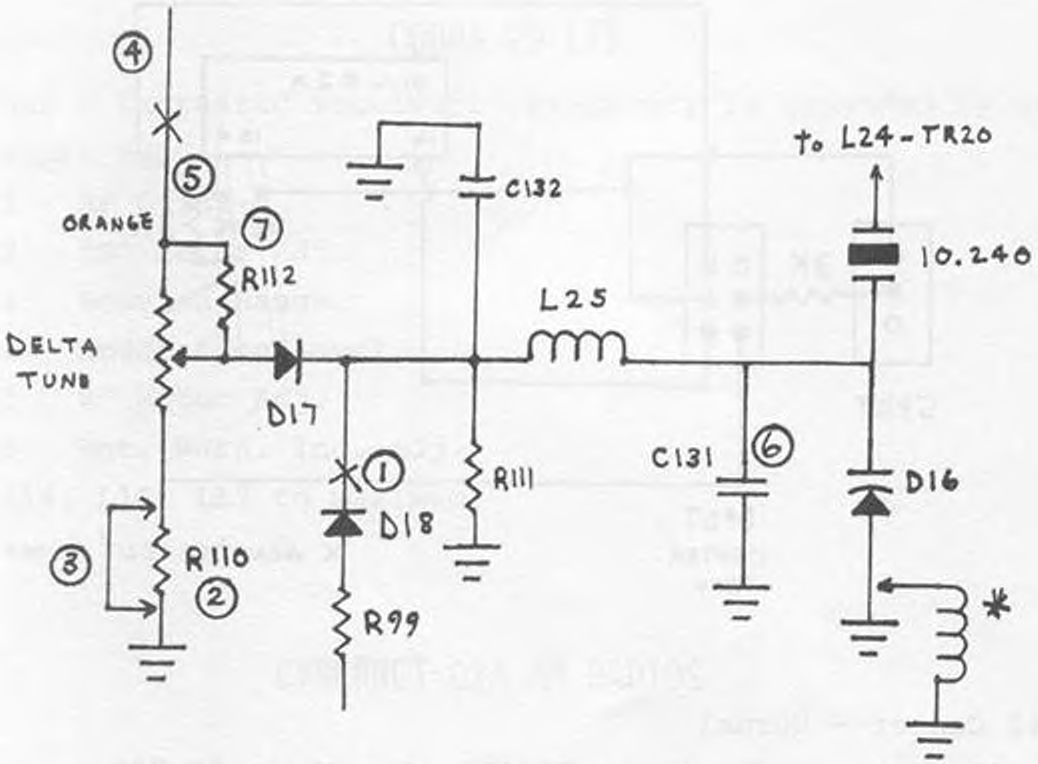

1. Clip D18.
2. Remove R110.
3. Install jumper wire in place of R110.
4. Cut Orange wire from Delta tune to PC Board at PC Board.
5. Resolder end of Orange wire to emitter of TR23.
6. Remove C131 6pf cap.
7. Remove R112.

* D16 may be changed to a Super Diode or a Super Slider can be added for more slide.

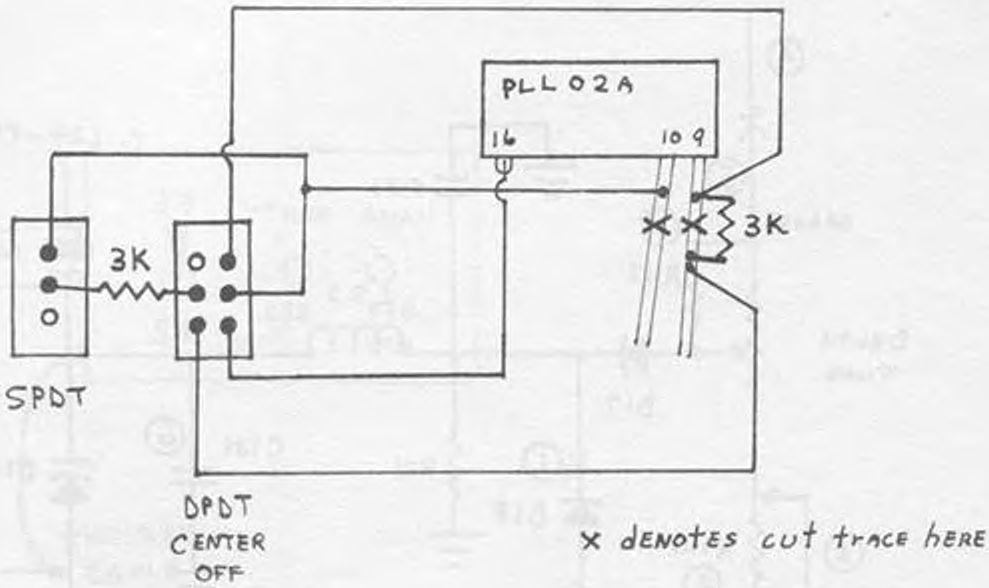

#1 up; #2 Center - Normal

#1 down; #2 Center - Ch. 12 is 27.425, Ch. 38 is 27.705.

#1 up; #2 up - Ch. 10 is 26.755, Ch. 38 is 27.065.

#1 up; #2 down - Ch. 10 is 26.435, Ch. 38 is 26.745.

A PRODUCT OF SELMAN ENTERPRISES

SPECIFIC RADIO TUNE-UPS

COBRA 29 LTD

Unit has a fantastic receiver! Frequency is expanded by using our Zapper 9000.

VR1 RF Gain.
VR2 "S" Meter Adj.
VR3 Squelch Range.
VR4 Modulation Level.
VR5 RF Meter Adj.
VR6 Ant. Warn. Ind. Adj.

Peak L14, L16, L17 to maximum.

CYBERNET 02A AM RADIOS

For increased RF Power, jump the diode that is located to the right of the AMC control.

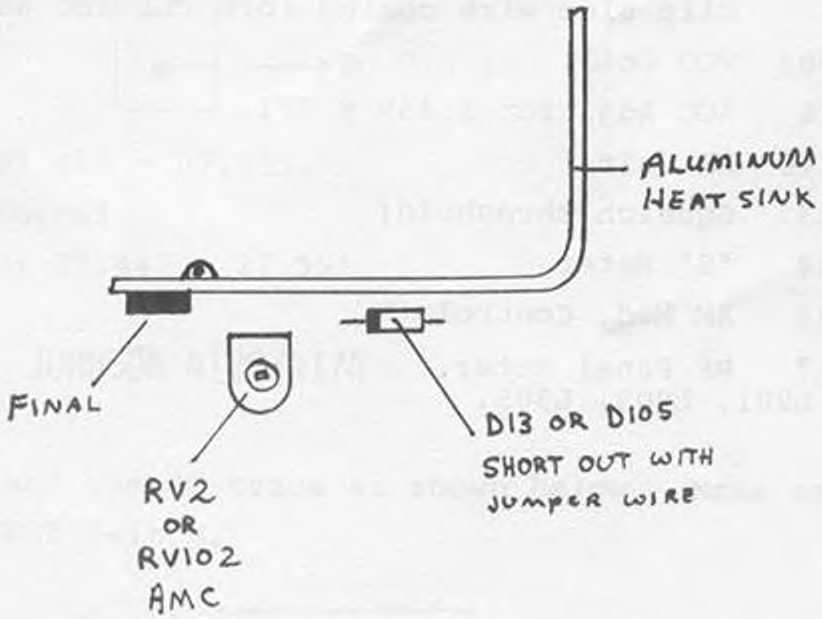

Drawing above represents Hygain Chassis. Yours may vary slightly.

GEMTRONICS GTX 5000
ROBYN T240D

This unit has had problems with the 6BQ5 tubes going out very quickly. I have replaced them with 7189 tubes and have had no further problems. It also helps increase modulation.

GENERAL ELECTRIC 3-5871A

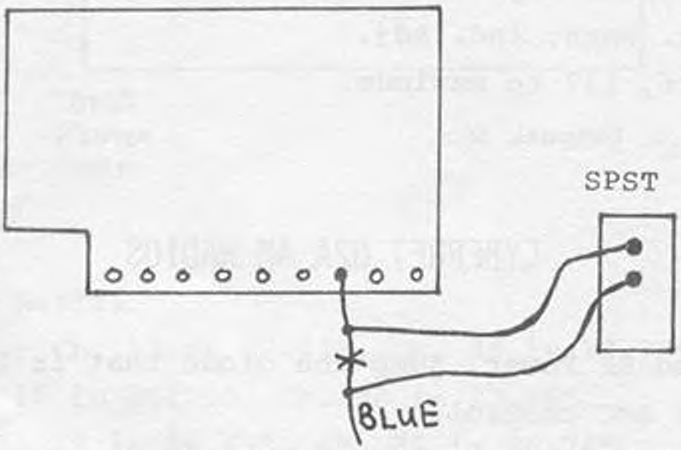

Clip Blue wire coming form PLL and add Switch.

T802 VCO Coil.

VR1 AGC Adj. for 1.45V @ TP1.

VR10 RF Gain.

VR3 Squelch threshold;

VR4 "S" Meter

VR6 AM Mod. Control.

VR7 RF Panel Meter.

Peak L901, L903, L905.

SPECIFIC RADIO TUNE-UPS cont'd.:

ITT CB-4000M

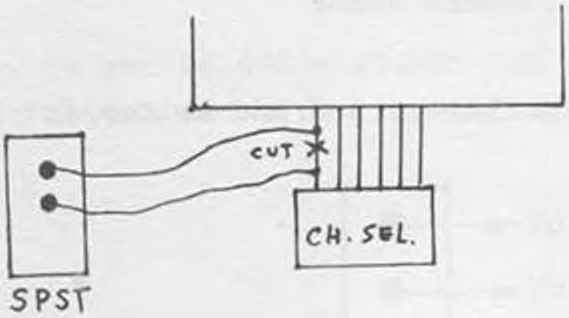

Cut #1 wire as shown and add switch. This gives Channels 41-59.

J.C. PENNEY 6246 (PLL 6055)

Connect and wire a SPDT Center Off Switch as shown:

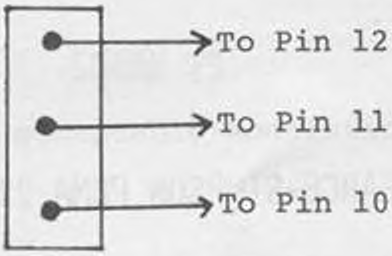

Top position gives 27.415 - 27.435.
Center Position is Normal.
Bottom Position gives 27.445 - 27.595.

JOHNSON 4125/4174

Locate the PLL Chip and the PC trace as shown below. Make and break trace with a SPST Switch.

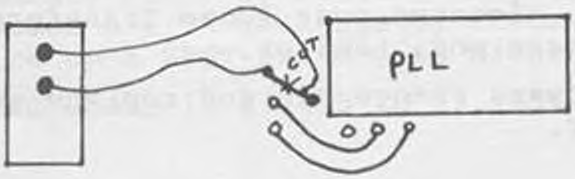

MIDLAND 13-882C (02A)

Isolate pin 9 from ground for lowers and add switch for Low frequencies.

T101 - VCO Coil
RV101- SQ. Range
RV103- S Meter
RV102- AMC
RV104- RF Power Meter
RV1 - Ant. warning threshold

RX Align: T104, T105, L112, T106, T107, T108, T109.

TX Align: L103, L104, T102, T103, L106, L109, L110.

MIDLAND 13-867

Clip D14 for max. mod.

Peak L12, L13.

PEARCE-SIMPSON PUMA 23B

RX: 455KC T7, T8, T6
27.115 T4, T3, T2, T1
VR1 IF Gain Connect VOM to base of TR7. Adj. to 1V.
VR4 SQ. Range
VR3 "S" Meter Adj. S9=100UV.

TX: On Ch. 13, peak T5, T11, T12, T13, L4, L5, L8 for max.

T.V.I. Trap Adj. L10 on Ch. 2.

Peak L8 for max. RF output.

VR2 RF Panel Meter

Modulation: Remove C50. Located near Audio Transformer. This will eliminate mod. Limiter.

TX Power: For more power, remove D10 and replace with a solid wire jumper.

ROBYN T240D

Here is how to get 26.645 - 27.595 out of the radio. Obtain a SPDT toggle switch and wire like this:

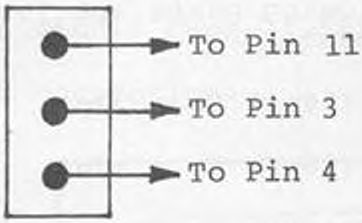

UP POSITION: Up to 27.595.

CENTER : Normal

DOWN : Down to 26.645.

Adjust L181 as needed for full frequency range.

VR4 Modulation

Peak L801, VC901, VC902 and L702 for maximum.

VR6 RF Power meter adjustment.

SHARK 23

Adjust VR201 for maximum acceptable modulation or clip D201.

Peak L308, L307, L305.

STANDARD 29A uPD857

L2 VCO Adjustment.

VR208 Squelch Range.

VR212 S Meter Adj.

VR210 RF Meter Adj.

VR213 Modulation Level.

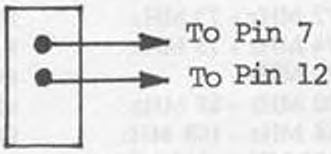

Peak L213, L214, L217.

For expanded frequency coverage:

1. Isolate Pin 7 by cutting away from ground.
2. Solder a 4.7K ¼W Resistor across cut.
3. Wire up a SPST Switch, as diagramed.

This will yield channels 27.455 to 27.805. Adjust L2 for full coverage.

REALISTIC DX300 (20-204)

This quality Synthesized Communication Receiver can usually be bought at a bargain price because of design problems.

PROBLEM: Beat tones, harmonics.

SOLUTION: The following parts are located inside the LED display compartment.

1. Change C501 (56pf) to a 22pf.
2. Change C503 (56pf) to a 10pf.
3. Add a 20pf Ceramic Trimmer across C503.
4. Connect your frequency counter probe to TP-501. Connect the probe ground to a ground on the DX-300 (as close to TP-501 as possible.) Adjust the trimmer above for 1MHz ± 10 Hz. (CRITICAL).

NOTE: If you don't have a counter, use WWV @ 10MHz. and adjust for a zero beat.

Now you can enjoy that DX300 Receiver!

27 MHz	CB, AM
29.6 MHz	Amateur Radio Band, FM
30 - 50 MHz	(normal scanner tuning range)
52.525 MHz	Amateur Radio Band, FM
57.5 MHz - 66 MHz	Department of Energy, Air Force, and Army — FM
72 MHz - 73 MHz	Highway Patrol Link Frequencies
74 MHz - 75 MHz	FAA and Landing Signals
79 MHz	Department of Interior — FM
80 MHz - 88 MHz	Military Frequencies — FM
88 MHz - 108 MHz	FM Music Band
108 MHz - 118 MHz	Aircraft Omni, Aircraft Weather, and airports — FM
118 MHz - 136 MHz	Aircraft Band — AM (most scanners receive this)
136 MHz - 138 MHz	NASA Satellite Downlink Band — FM
138 MHz - 138.5 MHz	United States Air Force — FM
138.52 MHz - 139 MHz	U.S. Navy — FM
139 MHz - 139.475 MHz	U.S. Army—FM
139.480 MHz - 144 MHz	All Military Services — FM
144 MHz - 148 MHz	Two Meter Band — FM (all scanners)
148 MHz - 174 MHz	High Band, Government — FM (all scanners)
174 MHz - 180 MHz	
380 MHz 381.6 MHz	FAA — FM

OPPS, WE GOOFED! cont'd.

VOL. 10,PAGE 48 : Step 5 should read - Clip D205.

VOL. 11,PAGE 4 : 3rd line from bottom should read - 29.805 on channel 40.

VOL. 11,PAGE 6 : For logic 26.645, Pin 14 is 0.

VOL. 11,PAGE 10 : 11.5816 should read 11.5858.

VOL. 11,PAGE 41 : Diagram Correction:

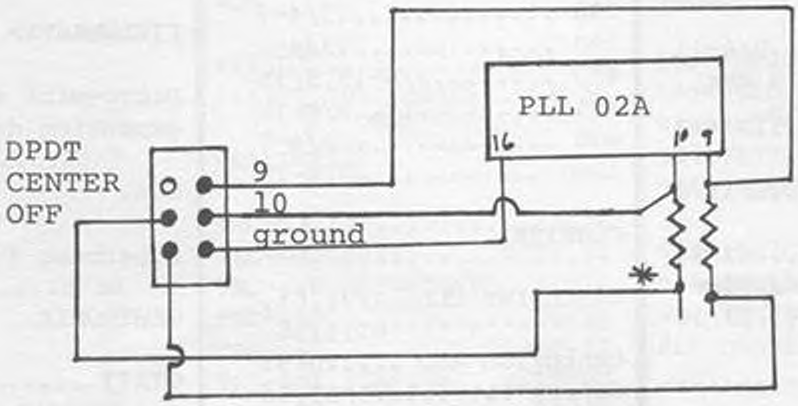

VOL. 11,PAGE 75 : Replace 03A with 02A (rewiring necessary) for extra channels.

SECRET CB INDEX

LISTING ALL MODELS/CHASSIS COVERED "SECRET CB" SERIES VOLUMES 1 THRU 12

CONVERSIONS VOL/PG

Conversion tips for all SSB radios 9/7
"A" Channel Mod. for all SSB 9/16-17
MB8719 Standard Modification 10/25-27
Tech tips on the 858 Chassis 10/55
Uniden 858PLL update 9/8-11
How to get on 28 & 29 MHz w/the uPD858 PLL Chip 11/4-7
How to increase ANL efficiency 70% 11/8
Ham Radio Crystal Selector 12/24
23 Ch PLL02A AM Conversion for 26.645 to 27.275..12/32

BOWMAN

CB910 update 11/41
CB930 .....3/21
CB950 .....5/39
CBH990 .....5/43

BROWNING LTD

LTD 1/53
MKIII 6/28
MKIV 6/29-30
MKIV, IVA 7/8-13

COBRA

29GTL 8/16
32XLR 4/47
87GTL 8/16
89GTL 8/16
132B 1/53
132XLR 10/45-46
135B 1/53
135XLR 4/38
135XLR update 10/43-46
138XLR 1/20,23
139XLR 1/20,23
140GTL 3/19,20
142GTL 8/15
146GTL 10/41
148GTL 8/16

COBRA (Cont.) VOL/PG

1000GTL 8/17
2000 (C.A.P.) 6/23
2000GTL ...5/20,7/15-17

COLT

SX33 .....3/4-7
210 LC7130PLL 11/33
290 .....3/4-7
390 .....3/4-7
480 .....3/8-15,5/39
485 .....3/8-15
800 .....3/4-7
1000 .....3/8-15

COURIER

Centurion PLL..1/31,61, 62,5/55
Centurion 40D 10/53
Galaxy 5/53,54 7/18-22
Gladiator PLL..1/31,61, 62,5/55
Spartan 1/61,62, 5/30,53,55

CPI

300 .....8/21
400 .....8/21
2000 .....3/25
2000 Low 9/23
2500 .....5/37,38
ALC Mod for increased SSB Power 11/9

CRAIG

L131 & L231.....9/12-14
L132 & L232.....9/12
L232 &L132 w/UPD 2824C Chip..10/47,11/10

DAK

IX 5/21-23
IX Mod. update..9/18-19
X 4/39-46

DELCO VOL/PG

Delco factory AM/FM/CB Combo Unit 11/38-40

DEMCO

Star II 5/60
Super Satellite 5/60

FIELDMASTER

Micro-mini 40 frequency expansion details...11/37

G.E.

Superbase 3-5875-A..10/48

GEMTRONIX

GTX77 .....5/39

HALLICRAFTERS

HCM271 .....5/50,51 6/39

HYGAIN

I-A 1/22
PLL 1/32
II 8/20
V-02A 11/8

J.C. PENNEY

6248 .....8/24

JOHNSON

242-4730 .....10/49-51
4740 (NDC40013) 11/9

KENWOOD

TS-120S 12/22
TS-130 .....12/23

KRACO

KCB233A 9/15

SECRET CB INDEX (CONT'D):

CONVERSIONS (Cont.)

MIDLAND VOL/PG

13--883B (UPD858) ...12/4
13-892 .....11/10
79-892 .....11/11
79-893 .....2/20
79-900 .....5/47
6001-7001 .....11/16

MORSE

3005 .....2/27

MOTOROLA

CM555 (TC9105P).....12/7

NESCO

1249 .....6/38

PACE

8092 .....6/35,36

PALOMAR

500 .....4/19,20
5/32-36
8/21

PANASONIC

RJ3600 .....10/57

PEARCE

Cheetah PLL 1/31,32
Simba PLL 1/31,32

PRESIDENT

Adams 2/16
AR144 .....11/17,18
AR144 UPD2824C PLL.11/41
AR144 Update 11/42
Grant 1/22,23,59
2/17,23-26
Grant (New).....5/24-27
Honest Abe 1/60
John Q 1/60
Madison w/11.3258..10/30

PRESIDENT VOL/PG

McKinley.....4/12,13
McKinley w/11.1125..10/29
Teddy R. 1/60
Washington 1/22,23,59
Washington w/11.1125
.....10/28-29
Zachary T 1/60

RCA

14T302 .....5/11,39
14T302 (PLL 02AG)....4/36

REALISTIC

TRC-57.....12/28
TRC-431.....7/23,24
TRC-448 REC86345PLL.11/16
TRC-450 .....10/31
TRC-451 .....12/10-13
TRC-455 (SM5104)....12/30
TRC-457 .....10/36
TRC-459 .....10/32-35
TRC-480 .....10/37,38
TRC-490 .....12/14,15

RAY JEFFERSON

CB845 (02A) 12/27

ROBYN

GT-440D 1/23
SB-505 .....5/41,42
SB-520D 2/21,22
SB-540D 5/19,36
7/25-38
WV-23 .....1/24,25
WV-110 (SM5104).....12/31

ROYCE

1-601 .....1/26
1-612 .....5/45
1-632 Update 11/21
1-641 .....11/20

SBE

Formula D 1/49
Touch Com 1/50,51

SBE (Cont.) VOL/PG

39CB Sidebander V..2/36,37
Sidebander II 2/28-35
Console IV 2/28-35
Sidebander Console VI.8/14
Console V 2/37,38
LCBS-4 .....7/29-33
LCMS-4 .....7/34-37

SEARS

562-38220700 .....10/56
663-3810 w/2824 Chip.11/22
934-3677150.....12/16,17
934-36772600.....12/16,17
934-38260700 .....6/26,27
10/52
934-38270700 .....5/28,29
934-38260700 Update..11/23
934-38270700 Update9/20-22
PLL D63911 w/UPD861C Chip
.....12/26

SHARP

CB-5470 HD42851B3....11/24

SILTRONIX

1011C 1/46
1011D 1/46

SONAR

FS-2340 .....5/31

STANDARD HORIZON

29-A 5/58

STONER

Pro-40.....4/52,53

SUPERSCOPE AIRCOMMAND

CB 340 .....8/19
CB 340 (861PLL)Update 9/24

SWAN SIGNET

270 .....5/58

CONVERSIONS (Cont.)

TEABERRY VOL/PG

52 Ch. Capability.....1/43
CAP Mod. 5/30
Model T 4/3,4
Racer T 1/58
Ranger T 4/1,2
6/24,25

STALKER

I(4001/4003) 4/7-9
T Bear 4/14,15
T Dispatch 4/14,15
Titan T 4/14,15
XV 10/39
XX 10/40

TRAM

D12 .....10/56
D42 .....4/47,5/40
D60 .....1/53
D62 .....10/45,46
D80 MB8734 w/11.3258.10/30
D201 .....1/56,3/22,23
D201A Update 10/54
D300 .....8/11-13

TRS CHALLENGER

460 .....4/28
600 .....4/28
730 .....4/30
1200 .....4/31
850/1400 ....4/21-27,32-35

TRUETONE

CYJ-4837A-87 .....11/14

VICTOR

770 .....4/56,57
790 .....4/58,59

WARDS

719A w/UPD2824 Chip..11/10

YAESU VOL/PG

100 .....5/58
FT-901 .....6/3-12
FT-7B 7/38-41
FT-707 .....10/20-24

****

SLIDE MODIFICATIONS

BOMAN VOL/PG

950 .....4/49

COBRA

132-A 1/28
135-A 1/28
135-B 1/29
138 .....1/28
139 .....1/30
140GTL 4/50
142GTL 4/50,8/35-37
135XLR 8/38
2000GTL 12/20

COLT

485 .....4/49

COURIER

Centurion 1/61
Galaxy 5/53
Gladiator PLL 1/61
Spartan 1/61

CPI

2500 .....5/37

CRAIG

L-131,L-231.....9/12,14
L-132,L-232 .....9/12
L-231 .....12/3

DAK

X 4/45

GEMTRONICS VOL/PG

GTX-77 .....4/49

HYGAIN

623 .....1/33
674-A 4/60

JOHNSON

352 .....1/34

MIDLAND

13-892 .....11/13
13-893 .....4/51
13-898 .....1/36
13-898B 1/35
79-960 .....5/47

N.D.I.

PC-201 (NDC40013 PLL).12/8

PACE

1000 .....1/37,38
DX1023B 1/39
8092 .....6/37
8193 (CCI3001).....12/9

PALOMAR

500 .....4/19,5/32,35

PEARCE

Bengal 1/40
Cheetah 1/40
Simba 1/40

PRESIDENT

Adams 2/16
Grant 1/59
Grant (New) 8/34
McKinley 4/12
Washington 1/59
Washington(New)....8/33,34

SECRET CB INDEX (CONT'D):

SLIDE MODIFICATIONS (Cont.)

RCA VOL/PG

14T302 .....4/49

REALISTIC

TRC-47 .....1/41
TRC-48 .....1/42
TRC-458 .....8/39,40

ROBYN

SB-505 .....5/41
SB-540D 5/19

ROYCE

1-632 .....5/14
1-641 .....4/51

SBE

Sidebander II..1/47,2/28-35
Sidebander V.....2/38-40
Console IV 2/28-35
Console V 2/28-35,38-40

SEARS

934-38270700...5/28,9/20-22
934-38310700 .....5/19
Roadtalker SM5104 ....12/18

SILTRONIX

SSB 1/45

STONER

Pro-40 .....4/52,53

TEABERRY

Stalker IX/XV 4/7,8

TRAM

D60 .....1/52
D201 .....1/56
D300 .....12/19
****

SPECIFIC RADIO TUNEUPS

AIR COMMAND VOL/PG

CB-640 .....5/38

ALARON

B-4075 .....9/30
B-4900 .....9/30
B-5050A 9/30
B-5200 .....3/41

AMERICAN MOTORS

3231847/48/49/50....12/34

AUDIOVOX

MCB750.....3/41
MCB5000 .....11/42
MDV6000 .....6/18

AUTOMATIC

CBH2265 .....3/41

BOMAN

CB555 .....3/44
CB750 .....2/43
CBH900 .....3/44
CB910 .....1/21,3/44
CB920 .....1/21
CB930 .....1/21,3/44
CB950 .....3/43
CBR9600 .....2/42,3/41
CBR9940 .....3/44
CBR9950 .....10/58

CHANNEL MASTER

CB6835 .....6/18

CHRYSLER

4048076/8077.....6/18

CLARION

DMA066 .....3/45
JC202E 3/45

CLARION (Cont.) VOL/PG

RCJ003 .....3/45
TC203E 6/18

COBRA

19 .....7/51
19GTL 12/34
21GTL 3/41,58
21XLR 1/20
21XLR Update 10/58
25GTL 3/41,58
29GTL 3/45
29XLR 1/20
32XLR 3/58
45XLR 12/34
46XLR 3/43
47XLR 3/45
50XLR 3/43
55XLR 3/43
66GTL 10/58
77X 9/30
78X 9/44
78XLR 4/49,6/19
86XLR 3/45
87GTL 6/19
89GTL 6/18
132XLR 3/45
135XLR 3/45
139 .....1/20
140GTL 3/20,58,4/50
142GTL 4/50
148GTL 6/19
1000GTL 6/18

COLT

222 .....6/20
290 .....3/40
390 .....3/4
480 .....3/8,58
485 .....3/8,6/19
800 .....3/4
800 Update 10/58
1000.....3/8,58
1200 .....9/30,31

COMMANDO

2340 .....1/21

SECRET CB INDEX (CONT'D):

SPECIFIC RADIO TUNEUPS (Cont.)

CONVOY VOL/PG

CON-400 .....3/58

CPI

CP400 .....10/59

COURIER

Blazer 40D 3/58
Classic PLL 40 .....3/43
Classic PLL 40 Update..10/59
Fanfare 125F 3/43
Fanon Rogue 40 .....3/43
Nightrider 40DR 3/46
Rangler 40D 3/58
Redball 1/21
Renegade 40 .....3/46

CRAIG

L101 .....6/20,11/42
L102 .....6/20
L131 .....10/59
L231 (AM,SSB) 10/60

DAK

Mark II 10/60
Mark V 12/34

DELCO

70BFMC3 .....2/43
80BCB2 .....6/20
90BCB1 .....10/60
90BFMC1 .....12/26
90BFTC1 (AM,FM,CB).....10/60
90BFPC1 .....12/26
91YFMC1 .....12/26

FANON

10-40 .....6/20
Fanfare 182F 3/41
Fanfare 184DF 3/47
Fanfare 185PLL 3/46
Fanfare 190DF.....3/47,7/51
Fanfare 350F 3/47

FORMAC VOL/PG

40 .....10/60

GE

3-5800A 3/50
3-5804B 6/21
3-5804F 10/61
3-5804G 12/35
3-5805A 9/31
3-5811B 9/31,10/61
3-5812A 10/61
3-5814B 6/21
3-5817A 7/51
3-5818A 2/42
3-5819A 11/42
3-5821A 9/31
3-5821B 3/54
3-5825A 9/31,32
3-5830 .....3/42
3-5869A 2/42
3-5871B 3/46
3-5875A 9/32
3-5900A 12/35

GEMTRONICS

GT44 .....2/42
GT55 .....3/48
GTX66 .....6/21
GTX77 .....6/21
GTX4040 .....3/48
GTX5000 .....3/42

GM

CBD-20U 12/36
CBD-203 .....3/48
4120 .....3/46
4145 .....9/32
4175 .....3/46

HYGAIN

VIII 3/59
674A 4/60
V674B 1/21
2701 .....2/42
2702 .....3/48
2703 .....3/48

HYGAIN VOL/PG

2716 .....12/36

ITT

4400M 4/17

J.C.PENNEYS

981-6204 (981-7461)....9/32
981-8360 .....10/61
981-6247 .....11/14

JIL

615CB 11/42

JOHNSON

123A 1/21
Viking 200 .....12/36
Viking 260/270 .....3/49
Messenger 40 .....12/36
Messenger 50 .....7/51
Messenger 80 (242-0080)7/51
Messenger 4120 .....3/47
Messenger 4135 .....3/48
Messenger 4140/4145....3/54
Messenger 4170/4175....3/47
Messenger 4170/4175 Update
.....11/43
Messenger 4250 .....3/48
Viking 4330/4360 .... 11/43

KRACO

KCB-2340 .....2/42
KCB-4000 .....11/43
KCB-4003 .....3/43
KCB-4005 .....9/38,11/43
KCB-4020 .....3/49
KCB-4030 .....8/44
KCB-4088 .....3/50

KRIS

XL25 .....2/43

SECRET CB INDEX (CONT'D):

SPECIFIC RADIO TUNEUPS (Cont.)

LAFAYETTE VOL/PG

Comstate 525 .....11/45
Dynacom 40 .....11/44
HB640 .....2/43
LM-100 (PLL02A) 12/36
LM-300 .....12/37
SSB140 .....11/44
Telestat 1240 .....5/14

LAKE

410 .....12/37
450 .....12/37
600 .....12/37

MEDALLION

63-240 .....3/50

MIDLAND

150 M 7/52
13-893 .....4/51
63-445 .....11/45
76-858 .....3/49
77-101B 8/44
77-101C 12/38
77-821 .....3/42
77-824 .....8/44
77-824B 12/38
77-824C 12/39
77-838 .....9/33
77-849 .....3/50
77-856 .....11/45
77-861 .....3/50
77-861B 11/45
77-865 .....9/33
77-899 .....9/33
77-963 .....3/42
78-574 .....9/38,12/39
79-892 .....3/49
79-893 .....2/20
79-900 .....9/33,34
3001 .....12/37
4001 (77-004) 7/52
5001 .....12/37
7001 (79-007).....11/45,46
78-999(02A) 12/7
79-891(02A) 12/5

MOPAR VOL/PG

4094173 .....3/51
4094176 .....3/51
4094177 .....3/49
4094178 .....3/60

MOTOROLA

T4000A/05A10A/20A 3/50
CF925AX 11/46
Mocat 40 .....11/46

NDI

PC-102 .....11/46
PC-200 .....7/52

PACE

8003 .....11/47
8008 .....2/43
8016 .....11/47
8046 .....9/33
8113 .....12/39
8117 .....11/47
8155 .....9/34,12/40
8193 .....7/52

PALOMAR

49 .....3/60
500 .....4/19,5/32
4100 .....3/54

PANASONIC

CR-B4747EU(AM-FM-CB)....9/34
RJ-3250 .....11/47
RJ-3600 .....11/48

PEARCE

Simpson Leopard B.....3/49
Simpson Tiger 40A 9/34
Supertiger 40A.....3/60

PIONEER VOL/PG

GT-100G(AM-FM-CB)....10/62

PRESIDENT

AR-7 .....12/40
AR-44 .....10/63
AX-711 .....12/40
Adams 2/16
Andrew J. 9/34
Dwight D. 10/62
James K. 7/53,12/40
Old Hickory 9/34
Washington 1/22

RAY JEFFERSON

CB-845 .....11/48

RCA

14T270 .....9/36
14T300 .....2/43
14T302 .....3/53
14T303 .....11/48

REALISTIC

TRC-45A 4/37
TRC-47 .....1/21
TRC-57 .....1/21
TRC-99A 4/37
TRC-100 .....4/37
TRC-180 .....4/37
TRC-200 .....4/37
TRC-200 Update 10/63
TRC-204 .....10/63
TRC-205 .....12/40
TRC-209 .....10/63
TRC-209(GRE7189PLL-VC)
.....12/49
TRC-410 .....12/29
TRC-420 .....12/41
TRC-421 8/44,12/41
TRC-421A 9/35
TRC-422 .....8/45
TRC-422A 10/64
TRC-424 .....3/57,9/35
TRC-425 .....7/53

SECRET CB INDEX (CONT'D):

SPECIFIC RADIO TUNEUPS (Cont.)

REALISTIC (Cont.) VOL/PG

TRC-426 .....10/64
TRC-427 .....8/45
TRC-428 .....11/48
TRC-431 .....4/37
TRC-432 .....11/48
TRC-440 .....8/45,9/35
TRC-441 .....11/49
TRC-448 .....3/51,10/64
TRC-449 .....3/51,9/35,36
TRC-452 .....1/21,3/52
TRC-454 .....8/45
TRC-455 .....3/60
TRC-457 .....9/35,36
TRC-458 .....10/64
TRC-461 .....3/51
TRC-462 .....9/36
TRC-466 .....3/51
TRC-468 .....3/51
TRC-470 .....9/39,12/41
TRC-471 .....8/45
TRC-480 .....7/53
TRC-490 .....11/49

ROBYN

WV110 .....3/56
WV110 Update 11/50
LB120 .....3/52
DG130D 3/56
007-140 .....3/52
T240D 3/56
SX-401 .....3/57
SX-402D 3/57
GT-410D 3/57
AM500D 3/57
SB-505 .....5/42
SB-520D 2/22

ROYCE

582(PLL3001) 12/42
604 .....12/42
607 .....12/42
1-617 .....3/52
1-619 .....3/56
1-621 .....3/57
1-625 .....3/56
1-639 .....12/41
1-641 .....3/60,4/51
1-651 .....7/55

ROYCE (Cont.) VOL/PG

1-655 .....11/50
1-660 .....2/42
1-673 .....3/52
1-675 .....3/53
1-680 .....3/52

SBE

26CB1A 3/61
42CB Cortez 40 .....3/61
44CB 9/36
45CB Trinidad III 3/61
49CB Tahoe 40 .....3/53
47CB 3/53
43CB 3/53
LCB-8(uPD2816C) 12/43
LCM-5 Land Command.....9/36
LCM-8 .....9/36
LCM-8(PLL03A).....12/42
LCMS-8(uPD2816C) 12/43

SEARS

CM-6000LA 3/59
CM-6000LC 3/59
Roadtalker 40 .....2/43
370-38050700 .....3/54
562-38200700 .....3/55
663-38020800 .....7/53
663-38070700 .....3/61
934-38061700 .....11/50
934-38062700 .....10/65
934-38080700 .....9/37
934-38081700 .....9/38
934-38120700 .....3/61
934-38260700 .....7/53
934-38270700 .....7/54
934-38310700 .....7/54,55

SHAKESPEARE

GBS240 .....3/53

SHARP

CB-800 .....2/42
CB-2170 .....12/43
CB-4370 .....12/43
CB-4470 .....12/44
CB-4670 .....7/55

SONAR VOL/PG

FS-2340 .....5/31

SPARKOMATIC

SR42/CBM 3/54

SURVEYOR

2620 .....3/55
2610 .....3/54

TEABERRY

Model T.....3/55
T Charlie 10/65
T Command 3/55
T Dispatch 3/55
Racer T 3/55
Stalker II 1/21
Stalker III 7/55
Stalker IV 12/44
Stalker V 7/55
Stalker VIII 10/65
Stalker IX 10/65
Stalker XII 7/56

TENNA

11302 (AM,FM,CB) 9/37
10902 .....10/65

TRS

Challenger 600 .....9/37
Challenger 850 .....7/55
Challenger 1200 .....12/44

TRAM

D12 .....3/54

TRUETONE

CYJ4832-A-87 .....2/43
CYJ4837-A-87 .....3/59
CYJ4862-A-87 .....9/39

UTAC

TRX-400 .....3/59
TRX-500 .....3/56

SECRET CB INDEX(CONT'D):

SPECIFIC RADIO TUNEUPS (Cont.)

VECTOR	VOL/PG	WARDS	VOL/PG
X	2/43	GEN-775A	3/61
770	9/37		
790	9/37		

****

VOLUME 1

	PAGE #
CRYSTAL CROSS REFERENCE GUIDE	5-10
LETTER CHART FOR CRYSTAL FREQUENCY CORRELATION	11-18
GENERAL INFORMATION	63-67
LINEARS	68-70
40 CHANNEL PLL SWITCH	71-72

****

VOLUME 2

	PAGE #
NEW CRYSTAL CROSS REFERENCE GUIDE	5-9
LETTER CHART FOR CRYSTAL FREQUENCY CORRELATION	10-13
ANTENNA REPORTS	53-55
BETA-COM INFO (Upgrading 23 channel radios)	57-87

****

VOLUME 3

	PAGE #
SUPER MOD. IV (Frequency Counter Kit)	16-18
MICROPHONE WIRING INSTRUCTIONS	26-32
PLL CHANNELIZER	33-40
ANTENNA SECRETS (K40 Stud Mount for Big Stick)	63-64
SPECIAL SECTION ON LINEAR AMPLIFIERS:	
50-70W Mobile	66
300-400W Base	67-69
70W Base	70-71
Eagle 200	72
Eagle 500	73
CONVERSION FROM AMATEUR TRANSMITTER TO LINEAR AMP	74
LINEAR AMP PROBLEMS & SOLUTIONS	75-76

****

VOLUME 4

	PAGE #
HOW TO BUILD YOUR OWN RELAY MODULE	16

SECRET CB INDEX (CONT'D):

VOLUME 4

(Cont.)	PAGE #
02A CHIP INFORMATION	54-55
TURNER MIC EXPANDER (500AMC Disable)	62
K40 BLINKIE	63
SUNSPOT PREDICTION CHART	64
LINEAR REPORT SECTION:	
D & A Maverick	65
D & A 500 Triple Conversion	65
Eagle 515 Modification	66-67
UNIDEN SSB 10 METER POWER CONVERSION	68-70
SUPER CLARIFIER DIODE	71

****

VOLUME 5

	PAGE #
10 METER CONVERSION MICROCOMPUTER (Micromonitor PLL)	1-5
ECHO BOX	6
250 WATT DUMMY LOAD	7
BUILT IN POWER MIKE	8-9
5-MILE SIMULATOR	10
RECEIVER PRE-AMP	11
GLEN DIGITAL CONTROLLER	12-13
GETTING SWR DOWN ON BASE ANTENNAS	15
APARTMENT ANTENNA	16
GROUNDING MOBILE RADIOS	17
OOPS! WE GOOFED!	17-18
Vol. 1, Page 23	18
Vol. 2, Page 20, 21	18
Vol. 3, Page 4, 7, 11, 25, 25, 33	18
Vol. 4, Page 5, 45, 50	17
THE ART OF WIDEBANDING 858 CHIP	44
CONVERSION KIT + MARS & CAP FOR SSB	48-49
CONVERSION OF AM/SSB TO 10 METER AMATEUR	52
REDCO UFO INSTALLATIONS	61-70
SLIDE INCREASE, ALL SSB RADIOS	71
RADAR COMMUNICATOR	72

****

VOLUME 6

	PAGE #
PLL CRYSTAL CROSS REFERENCE GUIDE	1-2
SECRET CB TEST TONE	13
ERRONEOUS SIGNAL LOCATOR	14
LOW COST AMATEUR CONVERSION FOR 10 METERS	15
BASE ANTENNA GROUNDING	16-17
SUPER CLARIFIER 10-TURN POT	22

SECRET CB INDEX (CONT'D):

VOLUME 6

(Cont.)	PAGE #
OOPS! WE GOFFED!	25
Vol. 5, Page 19, 20, 28	25
THUMBWHEEL 200 CHANNEL CONVERSION FOR 858 CHASSIS	31-34
REDCO UFO APPLICATIONS	40-52
SPECIAL SECTION ON LINEAR AMPLIFIERS:	
PDX 400	54
D & A Maverick 250	55
Maco Duster 300, 750 & 1000 Transmitter	56-57
Maco 75	58
500 CX & 700 CX 10 to 11 Meter Conversions	58
RDX-75	59
HDX-50	59
MDX-200	60
PDX-400	61
10 METER EXPERIMENTER BOARD INFORMATION	62-63
SUPER CLARIFIER HINTS	66
REDCO DX-50	68-70

****

VOLUME 7

	PAGE #
HOW TO MAKE YOUR EAGLE SCREAM	14
IMPROVED SLIDE MODIFICATION FOR 02A SSB RADIOS	42
UPDATED 200 CHANNEL AMATEUR CONVERSION FOR 858 CHIP	43-48
10 METER CONVERSION FOR SSB RADIOS USING MB8719 CHIP	49-50
HOW TO MAKE YOUR 858 CHASSIS SLIDE	56
LINEAR AMPLIFIER NOTES	57
ECHO BOX SPEECH PROCESSING FOR TRC-449	60
ADDING PING	61
CORRECTION TO THUMBWHEEL 200 CHANNEL CONVERSION	62-63
MICROMONITOR TECH NOTES	64-69
MICROMONITOR INSTALLATION INSTRUCTIONS FOR RADIOS USING 858 CHIP	70-71
AMP FOR RF PROBE	72
OSCILLOSCOPE MODIFICATION FOR RF & MODULATION DISPLAY	73
THE "BANDIT" ANTENNA	74-76
EXPO 100 KIT	76
SECRET CB'S OWN "TROUBLESHOOTER"	77

****

VOLUME 8

	PAGE #
WHAT"S NEW ON THE ELECTRONICS HORIZON?	1-6
UHF FM CB (GMRS)	7-10
UNIDEN MB8719 PLL CHIP FREQUENCY CONVERSION	15
FREQUENCY MOD. FOR J.C. PENNEY, COLT, LAFAYETTE, HYGAIN, ETC.	18
BROWNING MKIVA MOD. & UFO INSTALLATION	22-23
BROWNING MKIV TRANSMITTER TROUBLESHOOTING	25-32

SECRET CB INDEX (CONT'D):

VOLUME 8

(Cont.)	PAGE #
OOPS! WE GOOFED!	41-43
Vol. 5, Pages 31-34	41
Vol. 7, Pages 31, 37	42-43
LINEAR AMPLIFIER NOTES:	
Installing & troubleshooting Linear Amplifiers	47-49
10 Meter Amp board modification to upright driver	50
YOU CAN BUILD IT	
Two-Tone Generator	51
Yaesu 601(B) frequency counter modification to read CB Low, Middle, High frequencies	52-54
RF Test Meter	56-57
REDCO UFO MODIFICATION (form 20 to 29.995MHz)	55
SECRET CB'S POWER VECTORING	58
HOW THE ECHO BOX CAN ACTUALLY SURPASS THE POWER OF A LINEAR IN SSB	59
MICROMONITOR QUESTIONS	60-62
MICROMONITOR INSTALLATION INSTRUCTIOSN:	
SM5104 PLL	63-64
ICOM 22S	65-67
NEW PRODUCT RELEASE:	
Zapper 9000	68-69
Redco Digi-Scan UFO Elite	70
Chopper Charlie Antenna, Model 64 #5	71
Troubleshooter	73

****

VOLUME 9

	PAGE #
SSB'ers LOSE OUT AGAIN	1
FCC ANNOUNCES PLANS FOR SIDEBAND	2-3
FCC DELAYS NPRM; SSB FREQS. DOUBTFUL	3-4
PRODUCT REVIEW; SPEED-O-MATIC "SPEEDO-1" X-BAND RADAR GUN	5-6
RELAY CRYSTAL SWITCHING	25-26
LETTER FROM A FRIEND	27-28
HINTS & KINKS-ELECTRONIC CRYSTAL SWITCHING	29
SOLVING T.V.I.	40-42
IMPORTANT FACTS ABOUT ECHO BOXES	43-44
VOICE SIGNAL BOOSTER (VSB-1) INSTALLATION	45-48
POWER SUPPLY MODIFICATION FOR REALISTIC PRE-AMP NOISE-CANCELLING MIKE #21-1175	49-50
HINTS & KINKS- SWITCHABLE MODULATION INCREASE	51
RF ATTENUATOR	52-54
PRESIDENT SERVICE BULLETINS	55-61
OOPS! WE GOOFED!	
Vol. 8, Page 17	29
Vol. 4, Page 51	44

****

SECRET CB INDEX (CONT'D):

VOLUME 10

	PAGE #
LETTER FROM VIC	1
SECRET CB'S TROUBLESHOOTER	2-4
VOICE SIGNAL BOOSTER- "VSB-1"	5-19
UNCONVERTIBLE CHIP LIST	66
MODULATION ADJUSTMENTS FOR NEW RADIOS	67
LINEAR SUGGESTIONS	68-69
ZAPPER INSTALLATION HINTS	70
OOPS! WE GOOFED!	
Vol. 3, Page 33	71
Vol. 5, Page 24, 28 & 48	72
Vol. 8, Page 16, 17	72-73
Vol. 9, Page 9, 51	74-75
Vol. 9, Page 29	72

****

VOLUME 11

	PAGE #
CPI ALC MODIFICATION FOR INCREASED SSB POWER	9
VSB-1 UPDATES	25-26
NEW FRONTIER: FM CB	27-29
NEW PRODUCT: DIGI-SCAN DS-400	30-31
COMING ATTRACTIONS-SERIAL DATA/PLL FREQ. SYNTHESIZERS	32
UNCONVERTIBLE AT THIS TIME-GE 3-5900A TC9109P	33
ZAPPER 9000 INSTALLATION UPDATES	34
RADIO MODULATION ADJUSTMENTS FOR VARIOUS BRANDS/MODELS	51-53
HINTS ON SERVICING	54
SERVICE NOTES-GOLDEN EAGLE MARK IV TRANSMITTER	55
D104 & D104M6 ASTATIC MIKE MODIFICATION	55
HOW TO SOLVE NOISE PROBLEMS	56-58
MORE ON THE "TROUBLESHOOTER"	57
IN HOUSE VALUE LISTING	59
HOW TO BUILD	60-71
PLL PINOUT DIAGRAMS	72-77
THE "BANDIT" ANTENNA	53
OOPS! WE GOOFED!	
Vol. 3, Page 25	78
Vol. 6, Page 32	78
Vol. 7, Page 43,53,63	78
Vol. 8, Page 52	78
Vol. 10, Page 3	78
858 AM CONVERSION	35

****

SECRET CB INDEX (CONT'D):

VOLUME 12

	PAGE #
SIMPLE CURE FOR RX-TX TRACKING PROBLEMS	21
VSB-1 HOOK-UP:	
Teaberry Stalker XX	25
Realistic TRC-490	25
Wards GEN-719A	25
MODULATION ADJUSTMENTS FOR VARIOUS REALISTICS	33
ZAPPER 9000 REFERENCE CHART	46
ZAPPER TROUBLESHOOTING HINTS	47-48
TC9106 PLL OPERATION ANALYSIS	50-53
THE "SPREAD EAGLE" ANTENNA BREAK-THRU FOR TRUCKERS	54-55
BASIC PLL	56
ELECTRONIC TERMINOLOGY	57
SCANNER PROGRAMMING TIPS	58
INTO THE KNOW WITH JAPANESE SEMICONDUCTORS	59
TRANSISTOR SPECIFICATIONS	60
RESISTOR COLOR CODE	61-62
YOU CAN BUILD IT	
"Secret CB's" Super-Duper Power Supply Controller	63
Audio Test Station	64
Power Line Filter	65
OPPS! WE GOOFED!	
Vol. 4, Page 38	66
Vol. 10, Page 10, 16, 28	66
Vol. 11, Page 3, 10, 15, 16 & 71	66
"SECRET CB" INDEX ON VOLUMES 1 THRU 11	67-68
"SECRET CB" BOOK ORDER FORM	79

****

SELMAN ENTERPRISES, INC.
P. O. Box 8189
Corpus Christi, Texas 78412
Phone 512 992-1303

SHIP TO:

☐ $19.95 Vol. 1
☐ $19.95 Vol. 2
☐ $19.95 Vol. 3
☐ $19.95 Vol. 4
☐ $19.95 Vol. 5
☐ $19.95 Vol. 6
☐ $19.95 Vol. 7
☐ $19.95 Vol. 8
☐ $19.95 Vol. 9
☐ $19.95 Vol. 10
☐ $19.95 Vol. 11
☐ $19.95 Vol. 12
☐ $19.95 Vol. 13
☐ $19.95 Secrets of Satelite TV

Name _____

Address _____

City _____ State _____ Zip _____

Ship Via: ☐ UPS ☐ USM, Add $2.00 shipping for 1 Book + .50¢ for each additional book. Send Check, Money Order or Visa & Master Card accepted, add 3% for handling. For shipping outside USA please write for quote.

SECRET CB ORDER FORM

SEE YOUR LOCAL CB DEALER OR ORDER DIRECT

Volume 1

Volume 2

Volume 3

Volume 4

Volume 5

Volume 6

Volume 7

Volume 8

Volume 9

Volume 10

Volume 11

Volume 12

Volume 13